ADINSTRUMENTS

ML313 Cardiac Output Pod

Pod Series

Description

The Cardiac Output Pod is a signal conditioner for T-type thermocouples. A fast response time makes it suitable for the determination of cardiac output by the thermodilution method. A tissue implantable thermocouple probe (MLT1402) and the software add-on Cardiac Output Module are supplied with ML313C Cardiac Output Pod (with thermocouple).

System Compatibility

The Cardiac Output Pod connects to any PowerLab hardware units with Pod ports (8-pin DIN inputs). PowerLab and MacLab (except 4s, 8s and 16s) units without Pod ports require the FE305 Pod Expander.

The Cardiac Output Pod is supported by the following versions of software:

WINDOWS	MACINTOSH
• LabChart v6 or later	• LabChart v6 or later
• Chart v3.4.8 or later	• Chart v3.6.3 or later
• Scope v3.6.3 or later	• Scope v3.6.3 or later

Note: Earlier software versions do not support Pods.

Visit our website for information on operating system requirements.

Transducer Capabilities

Any T-type thermocouple probe with an appropriate connector can be used. However the response time must be short for the accurate determination of cardiac output. The MLT1402 T-type Ultra-fast Thermocouple Probe, that has a response time of 0.005 seconds, is recommended.

Applications

The Cardiac Output Pod is suitable for measurement of cardiac output in rats, mice or rabbits by the thermodilution method. **It is NOT for human use.**

Principle of Operation

The thermocouple voltage signal is amplified to produce 10 mV/°C @ 25 °C. Ice Point Reference compensation is provided. The Pod has an in-built 30 Hz low-pass filter. Additional filtering (1, 2, 5, 10, 20 Hz) may be available depending on the model of PowerLab being used. For fast response times use the 30 Hz filter setting. A 'delta' temperature operating (ΔT) mode allows a signal offset to be applied which allows small temperature variations to be monitored accurately.

Operating Instructions

Connect the 8-pin DIN cable from the rear panel of the Cardiac Output Pod to a Pod port on a PowerLab or Pod Expander. Do not connect other devices such as Front-ends or Instruments to the corresponding BNC connector on the channel used by the Pod. Connect the thermocouple probe to the T-type connector on the rear panel of the Cardiac Output Pod.

LabChart, Chart and Scope software will automatically recognize the Cardiac Output Pod and calibrate the signal in degrees centigrade. For accurate temperature determinations, or relative temperatures over a wide range, the Pod can be calibrated by using water just above and below the temperature range of interest and the Units Conversion feature of the LabChart software. For the measurement of small differences in temperature, less than five degrees, in ΔT mode, or for use in the range 35 to 40 °C, no calibration is usually necessary.

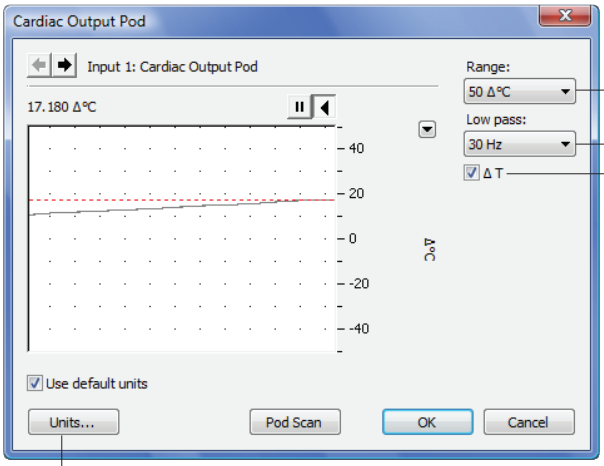

Select range

Select filter (response time)

Click this button to view or alter the calibration of the probe.

Check this box to select the 'delta mode', ΔT, for relative temperature measurements. The offset knob on the front of the Cardiac Output Pod can then be used to offset the signal.

Stacking and Unstacking Pods

Pods stack by clicking into place on top of each other. To separate stacked Pods, push the top Pod towards the back and then pull them apart from the back. See picture on right.

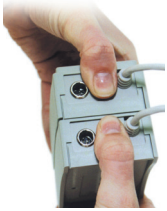

Typical Data

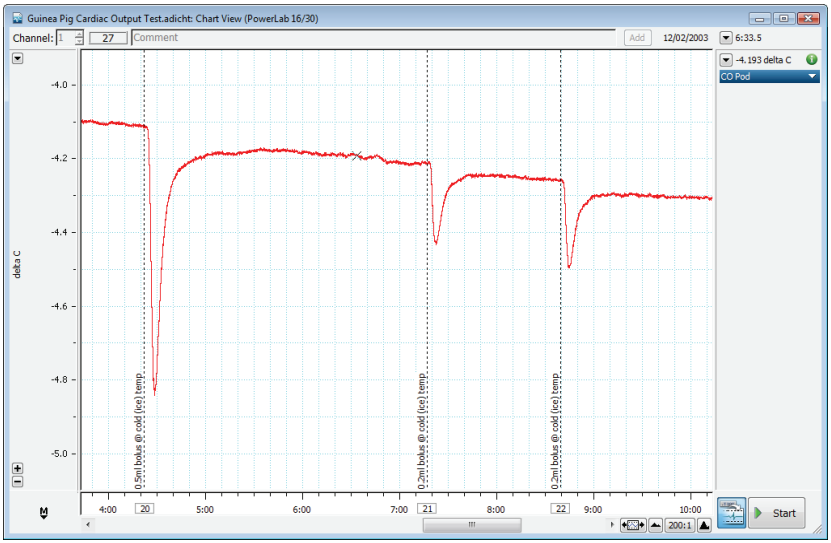

Guinea pig cardiac output determined by the thermodilution method. Bolus of cold saline is injected into the jugular vein and temperature probe is placed in the carotid artery.

Cardiac Output Block Diagram

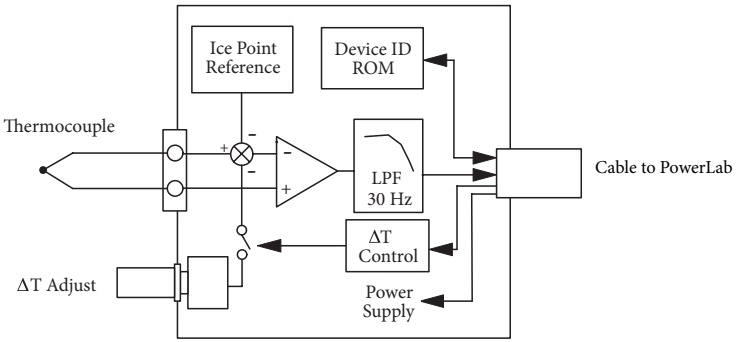

Caution

Read “Statement of Intended Use” on our website or in “Getting Started with PowerLab” before use.

Specifications

Probe type required:	T-type thermocouple
Ranges:	20 °C or 50 °C
ΔT ranges:	±1, ±2, ±5, ±10, ±20, ±50 Δ°C
Offset range (ΔT):	25 - 50 °C (Abs)
Output:	0 mV = 0 °C, 10 mV/°C
Compensation:	Ice point reference built in
Temperature accuracy:	< 0.2 °C @ 35 – 40 °C
Temperature resolution:	< 0.001°C @ ±20 Δ°C range or less
DC drift:	2 µV/°C
Low Pass filter:	30 Hz (also 1, 2, 5, 10 and 20 Hz on suitable PowerLab)
Response time (@ 30 Hz):	13 ms (10 – 90% risetime on square wave input)
Amplifier noise:	1 µV p-p (0.1 Hz to 10 Hz)
Input connector:	Miniature T-type
Dimensions (l x w x h):	108 x 58 x 35 mm
Weight:	~200 g

All specifications were tested at the time of printing and are subject to change.

Ordering Information:

ML313 Cardiac Output Pod (no thermocouple)

ML313C Cardiac Output Pod (with thermocouple)

Includes:

MLT1402 T-type Ultra-fast Thermocouple Probe.

MLS340 Cardiac Output Module

Optional Thermocouples:- Implantable

MLT1405 T-type Thermocouple Probe