BIO AND NEURO AMPLIFIERS

Owner's Guide

ADINSTRUMENTS
making science easier

This document was, as far as possible, accurate at the time of release. However, changes may have been made to the software and hardware it describes since then. ADInstruments Pty Ltd reserves the right to alter specifications as required. Late-breaking information may be supplied separately.

Trademarks of ADInstruments

PowerLab®, LabChart®, LabTutor®, LabAuthor® and MacLab® are registered trademarks of ADInstruments Pty Ltd. The names of specific recording units, such as PowerLab 8/35, are trademarks of ADInstruments Pty Ltd. LabTutor Server, Chart and Scope (application programs) and LabTutor Online are trademarks of ADInstruments Pty Ltd.

Other Trademarks

Apple, Mac and Macintosh are registered trademarks of Apple Computer, Inc.

Windows, Windows 7, Windows 8, Windows 10 and Windows Vista are either registered trademarks or trademarks of Microsoft Corporation.

All other trademarks are the property of their respective owners.

Document Number: U-BA/OG-01 Rev A.0, Date of issue: 08/18

Web: www.adinstruments.com

Manufactured in Australia by:
ADInstruments (Sydney) Pty. Ltd.,
13/22 Lexington Drive
Bella Vista 2153 New South Wales

Technical Support: support.au@adinstruments.com

Documentation: documentation@adinstruments.com

ADInstruments Pty Ltd. ISO 9001:2008 Certified Quality Management System

Chapter 1

Safety Notes

Statement of Intended Use

All products manufactured by ADInstruments are intended for use in teaching and research applications and environments only. ADInstruments products are NOT intended to be used as medical devices or in medical environments. That is, no product supplied by ADInstruments is intended to be used to diagnose, treat or monitor a subject. Furthermore no product is intended for the prevention, curing or alleviation of disease, injury or handicap. ADInstruments products are intended to be installed, used and operated under the supervision of an appropriately qualified life-science researcher. The typical usage environment is a research or teaching lab or hospital. ADInstruments equipment is not intended for use in domestic environments.

Where a product meets IEC 60601-1 it is under the principle that:

- this is a more rigorous standard than other standards that could be chosen.
- it provides a high safety level for subjects and operators.

The choice to meet IEC 60601-1 is in no way to be interpreted to mean that a product:

- is a medical device,
- may be interpreted as a medical device, or
- is safe to be used as a medical device.

Safety and Quality Standards

When used with ADInstruments isolated front-ends, PowerLab systems are safe for connection to subjects. The FE231 Bio Amp, FE232 Dual Bio Amp and FE234/FE238 Quad/Octal Bio Amps front-ends conform to international safety requirements. Specifically these are IEC60601-1 and its addenda (Safety Standards, page 3) and various harmonized standards worldwide (CSA601.1 in Canada and AS/NZS 3200.1 in Australia and New Zealand).

In accordance with European standards they also comply with the electromagnetic compatibility requirements under IEC60601-1-2, which ensures compliance with the EMC directive.

Quality Management System ISO 9001:2008

ADInstruments manufactures products under a quality system certified as complying with ISO 9001:2008 by an accredited certification body.

Regulatory Symbols

Amplifiers and signal-conditioners manufactured by ADInstruments that are designed for direct connection to humans and animals are tested to IEC60601-1:2012 (including amendments 1 and 2), and carry one or more of the safety symbols below. These symbols appear next to those inputs and output connectors that can be directly connected to human subjects.

BF (body protected) symbol. This means that the input connectors are suitable for connection to humans and animals provided there is no direct electrical connection to the heart.

Warning symbol. The exclamation mark inside a triangle means that the supplied documentation must be consulted for operating, cautionary or safety information before using the device.

CE Mark. All front-end amplifiers and PowerLab systems carry the CE mark and meet the appropriate EU directives.

Refer to booklet symbol. This symbol specifies that the user needs to refer to the Instruction manual or the booklet associated with the device.

Date of Manufacture/ Manufacturer's name symbol. This symbol indicates the date of manufacture of the device and the name of the manufacturer

WEEE directive symbol. Unwanted equipment bearing the Waste Electrical and Electronic Equipment (WEEE) Directive symbol requires separate waste collection. (See disposal section at the end of this chapter)

Further information is available on request.

Safety Standards

IEC Standard - International Standard - Medical Electrical Equipment

IEC 60601-1-1:2000	Safety requirements for medical electrical systems
IEC 60601-1:2012 + A1	General requirements for safety

General Safety Instructions

To achieve the optimal degree of subject and operator safety, consideration should be given to the following guidelines when setting up a PowerLab system either as stand-alone equipment or when using PowerLab equipment in conjunction with other equipment. Failure to do so may compromise the inherent safety measures designed into PowerLab equipment. ADInstruments front-ends are only suitable for operation with ADInstruments PowerLabs. Front-ends are suitable for use with any S/, SP/, /20, /25, /30 and /35 series and 15T PowerLabs (FE234 and FE238 only suitable for use with 35 series PowerLabs). Note that compliance with IEC60601-1 can only be achieved when front-ends are used with a /35 series Powerlab.

The following guidelines are based on principles outlined in the international safety standard IEC 60601-1: *General requirements for safety – Collateral standard: Safety requirements for medical systems*. Reference to this standard is required when setting up a system for human connection. The user is responsible for ensuring any particular configuration of equipment complies with IEC60601-1-1. Guidance on compliance with this standard is provided in the following sections.

PowerLab systems (and many other devices) require the connection of a personal computer for operation. This personal computer should be certified as complying with IEC 60950 and should be located outside a 1.8 m radius from the subject (so that the subject cannot touch it while connected to the system). Within this 1.8 m radius, only equipment complying with IEC 60601-1 should be present. Connecting a system in this way obviates the provision of additional safety measures and the measurement of leakage currents.

Accompanying documents for each piece of equipment in the system should be thoroughly examined prior to connection of the system.

While it is not possible to cover all arrangements of equipment in a system, some general guidelines for safe use of the equipment are presented below:

- Any electrical equipment which is located within the SUBJECT AREA should be approved to IEC 60601-1.
- Only connect those parts of equipment that are marked as an APPLIED PART to the subject. APPLIED PARTS may be recognized by the BF symbol which appears in the Safety Symbols section of these Safety Notes.
- Never connect parts which are marked as an APPLIED PART to those which are not marked as APPLIED PARTS.

- Do not touch the subject to which the PowerLab (or its peripherals) is connected at the same time as making contact with parts of the PowerLab (or its peripherals) that are not intended for contact to the subject.
- Cleaning and sterilization of equipment should be performed in accordance with manufacturer's instructions. The isolation barrier may be compromised if manufacturer's cleaning instructions are not followed.
- The ambient environment (such as the temperature and relative humidity) of the system should be kept within the manufacturer's specified range or the isolation barrier may be compromised.
- The entry of liquids into equipment may also compromise the isolation barrier. If spillage occurs, the manufacturer of the affected equipment should be contacted before using the equipment.
- Many electrical systems (particularly those in metal enclosures) depend upon the presence of a protective earth for electrical safety. This is generally provided from the power outlet through a power cord, but may also be supplied as a dedicated safety earth conductor. Power cords should never be modified so as to remove the earth connection. The integrity of the protective earth connection between each piece of equipment and the protective earth should be verified regularly by qualified personnel.
- Avoid using multiple portable socket-outlets (such as power boards) where possible as they provide an inherently less safe environment with respect to electrical hazards. Individual connection of each piece of equipment to fixed mains socket-outlets is the preferred means of connection.

If multiple portable socket outlets are used, they are subject to the following constraints:

- They shall not be placed on the floor.
- Additional multiple portable socket outlets or extension cords shall not be connected to the system.
- They shall only be used for supplying power to equipment which is intended to form part of the system.

Bio Amp Safety Instructions

The Bio Amp inputs displaying any of the safety symbols are electrically isolated from the mains supply in order to prevent current flow that may otherwise result in injury to the subject. Several points must be observed for safe operation of the Bio Amp:

- All Bio Amp front-ends (except for the FE234 Quad and FE238 Octal Bio Amps) and all PowerLab units with a built-in Bio Amp are supplied with a 3-lead or 5-lead Bio Amp subject cable and lead wire system. The FE234 Quad and FE238 Octal Bio Amps are supplied with unshielded lead wires (1.8 m). Bio Amps are only safe for human connection if used with the supplied subject cable and lead wires.
- Bio Amp front-ends are NOT defibrillator-protected. Using the Bio Amp to record signals during defibrillator discharges may damage the input stages of the amplifiers. This may result in a safety hazard.
- Never use damaged Bio Amp cables or leads. Damaged cables and leads must always be replaced before any connection to humans is made.

Earthing and Ground Loop Noise

The prime function of earthing is safety, that is, protection against fatal electrocution. Safety concerns should always override concerns about signal quality. Secondary functions of earthing are to provide a reference potential for the electrical equipment and to mitigate against interference.

The earthing (grounding) stud provided on the back panel of the PowerLab is a potential equalization post and is compatible with the DIN 42801 standard. It is directly connected to the earth pin of the power socket and the PowerLab chassis. The earthing stud can be used where other electronic equipment is connected to the PowerLab, and where conductive shields are used to reduce radiative electrical pick-up. Connection to the stud provides a common earth for all linked devices and shields, to reduce ground-loops.

The earthing stud can also be used where a suitable ground connection is not provided with the mains supply by connecting the stud to an earthed metal infrastructure, such as a metal stake driven into the ground, or metal water piping. This may also be required in laboratories where safety standards require additional grounding protection when equipment is connected to human subjects. Always observe the relevant safety standards and instructions.

Note that electromagnetically-induced interference in the recorded signal can be reduced by minimizing the loop area of signal cables, for example by twisting them together, or by moving power supplies away from sensitive equipment to reduce the inductive pick-up of mains frequency fields. Please consult a good text for further discussion of noise reduction.

Cleaning and Sterilization

ADInstruments products may be wiped down with a lint free cloth moistened with industrial methylated spirit. Refer to the manufacturer's guidelines or the Data Card supplied with transducers and accessories for specific cleaning and sterilizing instructions.

Inspection and Maintenance

PowerLab systems and ADInstruments front-ends are all maintenance-free and do not require periodic calibration or adjustment to ensure safe operation. Internal diagnostic software performs system checks during power up and will report errors if a significant problem is found. There is no need to open the instrument for inspection or maintenance, and doing so within the warranty period will void the warranty.

Your PowerLab system can be periodically checked for basic safety by using an appropriate safety testing device. Tests such as earth leakage, earth bond, insulation resistance, subject leakage and auxiliary currents and power cable integrity can all be performed on the PowerLab system without having to remove the covers. Follow the instructions for the testing device if performing such tests. If the PowerLab system is found not to comply with such testing you should contact your PowerLab representative to arrange for the equipment to be checked and serviced.

WEEE Directive symbol

Environment

Electronic components are susceptible to corrosive substances and atmospheres, and must be kept away from laboratory chemicals.

Disposal

- Forward to recycling center or return to manufacturer.
- Unwanted equipment bearing the Waste Electrical and Electronic Equipment (WEEE) Directive symbol requires separate waste collection. For a product labeled with this symbol, either forward to a recycling center or contact your nearest ADInstruments representative for methods of disposal at the end of its working life.

Chapter 2

Overview

The PowerLab system consists of a recording unit and application programs that run on the computer to which the unit is connected. It provides an integrated system of hardware and software designed to record, display, and analyze experimental data.

Front-ends are ancillary devices that connect to the PowerLab recording unit to extend the system's capabilities. They provide additional signal conditioning, and other features, and extend the types of experiments that you can conduct and the data you can record.

All ADInstruments front-ends are designed to be operated under full software control. No knobs, dials, or switches are needed, although some may be provided for reasons of convenience or safety.

Introduction

The PowerLab controls front-ends through an expansion connector called the I^2C (eye-squared-sea) bus. This makes it very easy to add front-ends to the system or to transfer them between PowerLabs. Many front-ends can be added to the system by connecting the I^2C sockets in a simple daisy-chain structure. The PowerLab provides control and low-voltage power to front-ends through the I^2C bus so, in general, no separate power supply is required.

In addition, each front-end requires a separate connection to one or more analog input channel(s) of the PowerLab. External signals are acquired through the PowerLab analog inputs and amplified before being digitized by the PowerLab. The digitized signal is transmitted to the computer using a fast USB connection. ADInstruments software applications LabChart, LabTutor, LabStation and Lt receive, display, and record the data and your analysis to the computer's hard disk.

Front-ends are automatically recognized by the PowerLab system. Once connected, the features of the front-end are combined with the appropriate features of the PowerLab (for example, range and filtering options) and are presented as a single set of software controls.

Note: The Stimulator front-ends differ from other front-ends in two respects:

1. Since they need to produce a reasonably high voltage and current, the Stimulator front-ends require a power supply in addition to the power provided by the I^2C bus.
2. As they produce voltage output for stimulation, they are connected to a positive analog output socket of the PowerLab as a source for timing and producing pulses.

A variety of accessory products are available with ADInstruments Front-ends, such as transducers, signal cables and recording electrodes. Some of these are listed in the Getting Started with Front-end Signal Conditioners booklet, supplied with your Front-end. For more details see: http://www.adinstruments.com/ or contact your local ADInstruments representative.

Checking the Front-end

Before connecting the front-end to anything, check it carefully for signs of physical damage.

1. Check that there are no obvious signs of damage to the outside of the front-end casing.
2. Check that there is no obvious sign of internal damage, such as rattling. Pick up the front-end, tilt it gently from side to side, and listen for anything that appears to be loose.

If you have found a problem, contact your authorized ADInstruments representative immediately and describe the problem. Arrangements can be made to replace or repair the front-end.

Connecting to the PowerLab

To connect a front-end to the PowerLab, first ensure that the PowerLab is turned off. Failure to do this may damage the PowerLab, the front-end, or both.

The BNC cable from the front-end signal output must connect to an analog input on the PowerLab. If you have an older PowerLab that has differential (rather than single-ended) inputs, the front-end must connect to a *positive* input.

Single Front-ends

Connect the I²C output of the PowerLab to the I²C input of the front-end using the I²C cable provided. Figure 2–1 shows how to connect up a single front-end to your recording unit.

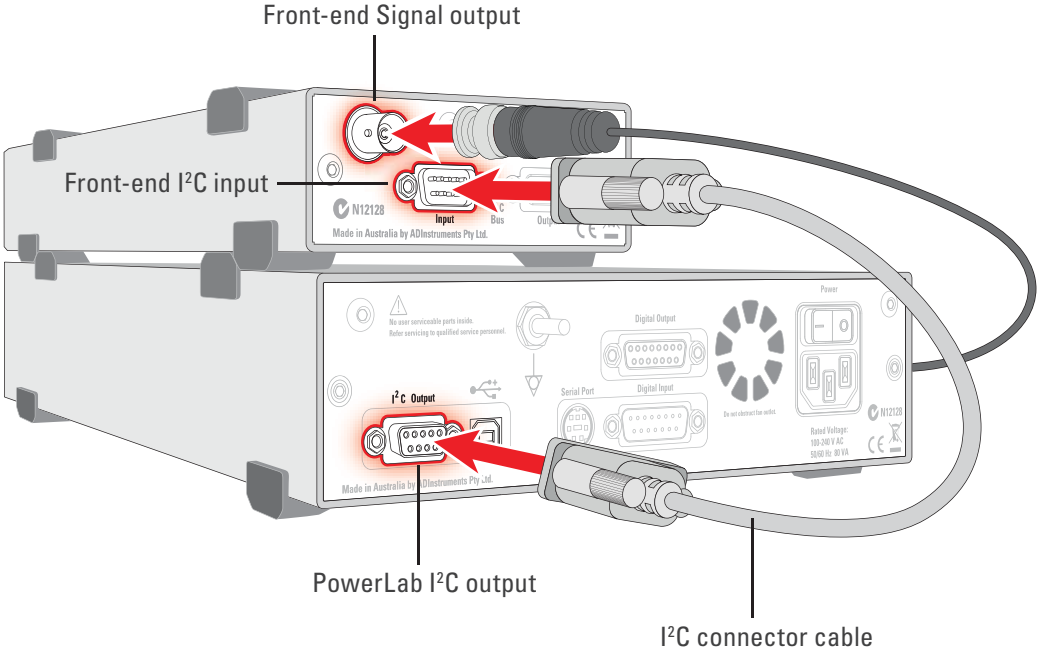

Figure 2–1 Connecting a front-end to the PowerLab: a PowerLab has only one I²C output, and each front-end has one I²C output and one I²C input

Check that the connectors for the I²C bus are screwed in firmly. Check the BNC cable for firm connections as well. Loose connectors can cause erratic front-end behavior, or may cause the front-end to fail to work at all.

The Signal Output Socket

The BNC socket labelled Signal Output on the back panel of the front-end provides the signal output to connect to an analog input socket on the front of the PowerLab. A BNC-to-BNC cable is supplied for this connection. If necessary, use a BNC to DIN smart adapter [MLAC22] to connect the BNC cable to your PowerLab's input.

Note: If you have an older PowerLab with differential (rather than single-ended) inputs, the BNC cable must connect to a *positive* analog input on the PowerLab.

Multiple Front-ends

Multiple separate front-ends can be connected up to a PowerLab. The initial front-end should be connected with the I²C cable as in Figure 2–1. The remainder are daisy-chained via I²C cables, connecting the I²C output of the last connected front-end to the I²C input of the front-end to be added (Figure 2–2).

Figure 2–2 Connecting multiple front-ends to the PowerLab (two single front-ends shown for simplicity)

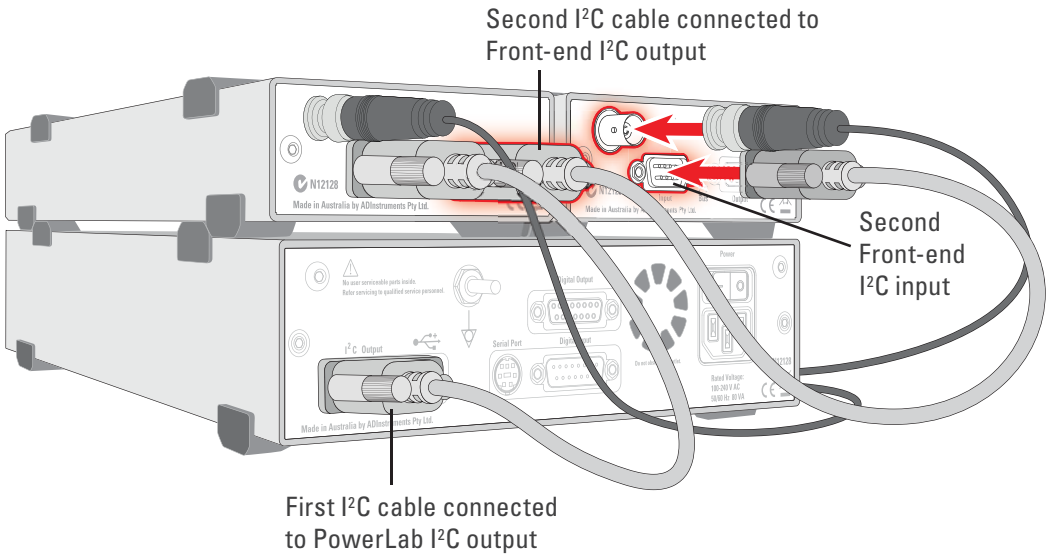

The number of normal front-ends that can be connected to a PowerLab depends on the number of analog input channels on the PowerLab. Each BNC cable from a front-end should be connected to one analog input channel on the PowerLab, for example, Input 1 on a /30 or /35 series PowerLab.

Note: Only one Stimulator front-end such as a Stimulus Isolator can be connected to the positive output of the PowerLab.

Special Cases

Some front-ends have their own specific connection requirements. Please refer to the individual chapter for each front-end in this guide.

Connecting Stimulator Front-Ends

The PowerLab analog outputs provide a variable, computer-controlled voltage output that can be used with LabChart, LabTutor, LabStation or Lt to connect a Stimulator front-end, or to stimulate directly, or to control a peripheral device. A voltage output is generated by the PowerLab and delivered via the BNC output sockets, giving positive, negative, differential, or independent stimuli, depending on the PowerLab used and the software settings.

The /20, /25, and /26 series PowerLabs have analog outputs labeled + and –. In contrast, the SP, ST, /30 and /35 series PowerLabs have the outputs labeled Output 1 and Output 2.

For the /20, /25 and /26 series PowerLabs:

The negative (–) output is the complement of the positive (+) output, so the stimuli from the two outputs are mirror images. If one output gives a positive voltage, the other gives a negative one, and the two together give a differential voltage. One Stimulator front-end such as a Stimulus Isolator or Stimulator HC can be connected to the positive output of these PowerLabs.

Note: If you connect the Stimulator HC to a PowerLab that has an in-built Isolated Stimulator, such as a PowerLab 26T, only the external, connected stimulator is used.

For /SP, /ST, /30 and /35 series PowerLabs:

Output 1 and Output 2 can function independently. However, only one Stimulator front-end such as a Stimulus Isolator or Stimulator HC can be connected to the positive output (Output 1) of these PowerLabs. With a Stimulator front-end connected, the second output (Output 2) can function independently, and a second tab appears in the Stimulator dialog in LabChart 7 for Windows. Therefore Output 2 remains available for other uses, such as creating analog waveforms and triggering other systems.

Maximum Number of Front-Ends

The I^2C bus can control a maximum of sixteen front-ends. Therefore, if you are using a PowerLab 16/30, which has sixteen input channels, you can record from sixteen single channel front-ends.

Using ADInstruments Programs

Front-ends are designed for use with PowerLabs and ADInstruments programs such as LabChart, LabTutor, LabStation and Lt. The functions of the front-end are combined with those of the PowerLab, and are presented as a single set of software controls in the ADInstruments program. Depending on the front-end(s) connected, front-end-specific dialogs replace the Input Amplifier dialogs or the Stimulator dialog.

The **LabChart Help** detail the Input Amplifier and Stimulator dialogs, and explain relevant terms and concepts, but they do not cover front-end-specific features. These features are described in detail in the following chapters for each front-end.

Front-end Drivers

A device driver is a piece of software that allows the computer's operating system and other software to interact with a hardware device. ADInstruments applications like LabChart communicate with a front-end via an appropriate front-end driver. These drivers are automatically set up on the computer when ADInstruments applications are installed, and their operation is usually invisible to the user.

However, under certain circumstances you may receive an error message during the startup of LabChart indicating that there is a problem with the front-end driver. Subsequently, the front-end will not function. This is invariably caused by the absence or incompatibility of a driver required for communication with the front-end due to an old version of the software being run. The problem can be remedied simply by reinstalling

and rerunning a current version of the software, which will include the latest front-end drivers.

The Front-end Self-test

Once the front-end is properly connected to the PowerLab, and the proper software is installed on the computer, a quick check can be performed on the front-end. To perform the self-test:

- Turn on the PowerLab and check that it is working properly, as described in the owner's guide that was supplied with it.
- Once the PowerLab is ready, start LabChart, LabTutor, LabStation or Lt.
- While the program is starting, watch the Status indicator on the front-end's front panel. During initialization, you should see the indicator flash briefly and then remain lit.

If the indicator lights correctly, the front-end has been found by the PowerLab and is working properly. If the indicator doesn't light, check your cable connections and repeat the start-up procedure.

Software Behavior

When a front-end is connected to a PowerLab and the ADInstruments software is successfully installed, the **Input Amplifier...** menu command from the Channel Function pop-up menu in LabChart should be replaced by the **<Front-end>...** menu command.

For example, with a Bio Amp front-end connected, **Bio Amp...** should appear in the Channel function pop-up menu.

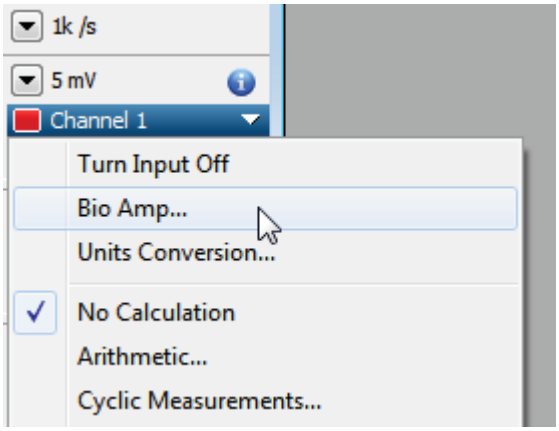

Figure 2–3 Channel Function pop-up menu in LabChart with the Bio Amp front-end connected

If the application fails to find a front-end attached to a channel, the normal **Input Amplifier...** command or button remains. If you were expecting a connected front-end, you should close the program, turn everything off, check the connections, restart the PowerLab and then relaunch LabChart, LabTutor or the Kuraloud Desktop App.

Preventing Problems

Several problems can arise when using the PowerLab system for recording biological signals. It is important to understand the types of problems that can occur, how they manifest themselves, and what can be done to remove them or to minimize their effect. These are usually problems of technique, and should be addressed before you set up your equipment.

Aliasing

Recordings of periodic waveforms that have been undersampled may have misleading shapes and may also have artifacts introduced by aliasing. Aliasing occurs when a regular signal is digitized at too low a sampling rate, causing the false appearance of lower frequency signals. An analogy to aliasing can be seen in old films: spoked wagon wheels may appear to stop, rotate too slowly or even go backwards when their rate of rotation matches the film frame speed – this is obviously not an accurate record.

The Nyquist–Shannon sampling theorem states that the minimum sampling rate (f_s) to accurately describe an analog signal must be at least twice the highest frequency in the original signal. Therefore, the signal must not contain components greater or equal to $f_s/2$. The term $f_s/2$ is known as the Nyquist frequency (f_n) or the 'folding frequency' because frequencies greater than or equal to f_n fold down to lower frequencies about the axis of f_n.

When aliasing of noise or signals is seen, or even suspected, the first action you should take is to increase the sampling rate. The highest available sampling rates are 100k /s or 200k /s, depending on your PowerLab. To view the frequencies present in your recorded signal open the Spectrum window in LabChart. For more information about Spectrum, see the LabChart Help Center.

If unwanted high-frequency components are present in the sampled signal, you will achieve better results by using a low-pass filter to remove them. The best kind of filter for this purpose is the Anti-alias filter option available in the front-end-specific **Input Amplifier...** dialog. This is a special low-pass filter that is configured to automatically remove all signals that could alias; i.e., those whose frequency is greater or equal to half the sampling rate.

For certain PowerLabs, the Anti-alias filter option is not available. Therefore you should select an appropriate low-pass filter to remove any unwanted signals (or noise) occurring at frequencies greater or equal to half the sampling rate.

Frequency Distortion

Frequency distortion will occur if the bandwidth of your recording is made smaller than the bandwidth of the incoming signal. For example, if an ECG was measured with a sampling rate of 100 samples per second (100 Hz) and the Bio Amp had a low-pass filter applied at 50 Hz, the fast-changing sections of the waveform (the QRS complex) may appear smaller and 'blunted', while the slower T-wave sections remain relatively unchanged. This overall effect is called frequency distortion.

It can be eliminated by increasing the frequency cut-off of the low-pass filter in the front-end-specific **Input Amplifier...** dialog to obtain an undistorted waveform.

Similarly, if the high-pass filter was set too high, the amplitude of the T-wave sections may be reduced. The **Input Amplifier...** dialog allows you to examine ECGs and similar slowly changing waveforms to fine-tune filter settings before recording.

Saturation

Saturation occurs when the range is set too low for the signal being measured (the amplification, or gain, is too high). As the signal amplitude exceeds the allocated range, the recorded waveform appears as if part of the waveform had been cut off, an effect referred to as clipping.

Clipping can also be caused by excessive baseline offset: the offset effectively moves the whole waveform positively or negatively to an extent that causes all or part of it to be clipped. This problem is overcome by selecting a higher range from the Range menu in the front-end-specific **Input Amplifier...** dialog. In the case of excessive baseline offset, you may wish to apply a high-pass filter with a higher frequency cut-off.

Ground Loops

Ground loops occur when multiple connected pieces of recording equipment are connected to mains power grounds. For safety reasons, *all* electrical equipment should have a proper connection to the mains power grounds, or to a primary earth connection in situations where a mains ground connection is not available. Connecting linked electrical equipment to a common earth connection (equipotential connection point) – such as the earthing (grounding) stud provided on the rear of all PowerLabs – can prevent ground loops.

The electric fields generated by power lines can introduce interference at the line frequency into the recorded signal. Electromagnetic fields from other sources can also cause interference: fluorescent tubes, apparatus with large transformers, computers, laptop batteries, network cables, x-ray machines, microwave ovens, electron microscopes, even cyclic air conditioning.

Reasonable care in the arrangement of equipment to minimize the ground loop area, together with proper shielding, can reduce electrical frequency interference. For example, use shielded cables, keep recording leads as short as possible, and try twisting recording leads together. For sensitive measurements, it may be necessary to place the subject (the biological source) in a Faraday cage.

Interference should first be minimized, and then you can turn on the Mains or notch filter in the front-end-specific **Input Amplifier...** dialog.

Mains filter

The Mains filter (/20, /25, /30, /35 and 26T PowerLabs) allows you to filter out interference at the mains frequency (typically 50 or 60 Hz). The mains filter is an adaptive filter which tracks the input signal over approximately 1 second. A template of mains-frequency signal present in the input is computed from the signal. The width of the template is the mains power period (typically 16.6 or 20 ms) as determined from zero-crossings of

the mains power. The filtered signal is obtained by subtracting the template from the incoming signal.

In comparison with a conventional notch filter, this method produces little waveform distortion. It attenuates harmonics of the mains frequency as well as the 50 or 60 Hz fundamental and therefore effectively removes non-sinusoidal interference, such as that commonly caused by fluorescent lights.

The filter should not be used when:

- the interference changes rapidly. The filter takes about 1 second to adapt to the present level. If interference is present and then is suddenly removed, interference in the filtered signal will temporarily worsen.
- your signal contains exact factors or harmonics of frequencies close to the mains frequencies, for example, a 30 Hz signal with 60 Hz mains frequency.
- your signal is already free from interference. If the signal-to-noise ratio is greater than about 64 the mains filter introduces more noise than it removes.
- you are recording at close to maximum sampling rates. The mains filter uses some of the PowerLab's processing power and therefore reduces the maximum rate at which you can sample.

Electrode Contact

Occasionally one of the lead wires connecting the subject to the front-end may become disconnected, or an electrode contact may become poor. If this should happen, relatively high voltages (potentials) can be induced in the open wire by electric fields generated by power lines or other sources close to the front-end or the subject. Such induced potentials will result in a constant amplitude disturbance in the recorded waveform at the power line frequency (50 or 60 Hz), and loss of the desired signal. If the problem is a recurring one, one of the leads may be faulty. Check connections and replace faulty leads, if necessary.

Motion Artifacts

A common source of artifacts when recording biological signals is due to motion of the subject or equipment. Often applying a high-pass filter can help to remove slowly changing components in a recorded signal.

- Muscular activity generates its own electrical signals, which may be recorded along with an ECG, say, depending on the location of the electrodes.
- If an electrode is not firmly attached, impedance (and hence the recorded signal) may vary as the contact area changes shape owing to movement.
- Movement of patient cables, particularly bending or rubbing together (triboelectric effects) may generate artifacts in a signal.
- Subject respiration can also generate a signal; breathing can result in a slowly changing baseline corresponding to inspiration and expiration.

If the subject is liable to move during recording, then special care needs to be taken when attaching the electrodes and securing the patient leads. Make sure the skin is cleaned and lightly abraded before attaching the electrodes.

Chapter 3

Animal Bio Amp

The FE136 Animal Bio Amp is a modular device, in a family called front-ends, designed to extend the capabilities of the PowerLab system. The Animal Bio Amp is designed to allow the PowerLab system to record bioelectrical signals, such as ECG, EOG, ERG, EMG, and EEG, from animals or isolated tissues, or action potentials from isolated nerves.

Warning! The Animal Bio Amp is not intended for human use and should never be connected to a human subject.

The Animal Bio Amp provides:

- a low-noise, high-gain differential amplifier specifically designed for biological signal measurements;
- software-controlled low-pass, high-pass, and notch filters to remove unwanted signal frequencies for particular uses;
- audio output, for use with EMG or EEG signals, and so on.

The Animal Bio Amp

The Animal Bio Amp has been designed to integrate fully into the PowerLab system. The Animal Bio Amp is essentially an extension of the PowerLab's input amplifiers, so the amplification (and hence the ranges) you see offered in the LabChart software will be the combination of both pieces of hardware.

This chapter contains general information about the features, connections, and uses of the Animal Bio Amp. More detailed information can be found in the Technical Aspects and Specifications sections.

The Front Panel

The front panel of the Animal Bio Amp has three input connectors and one indicator light.

Figure 3–1
The front panel of the Animal Bio Amp

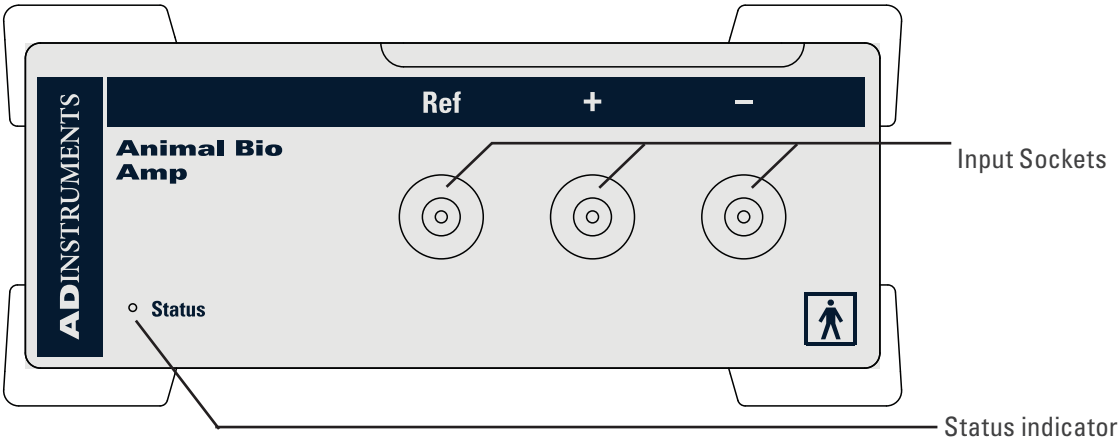

The Input Sockets

Connections are made to the Animal Bio Amp are made using the three shrouded 1.5 mm male pin sockets on the front panel. A separate socket is provided for each of the positive (+), negative (–) and Ground/Reference (Ref) cables. Three cables are provided and each is terminated with a miniature alligator clip suitable for use with a wide variety of electrodes (not supplied).

The Status Indicator

Located at the bottom right of the front panel of the Animal Bio Amp is the status indicator light. When lit, it indicates that the PowerLab software has found the Animal Bio Amp and that it is ready to use. If the light does not go on, then the Animal Bio Amp is not connected properly, or there is a software or hardware problem.

The Back Panel

The back panel of the Animal Bio Amp provides all the sockets for connection of the Animal Bio Amp to the PowerLab and to other front-ends.

I²C Input and Output Sockets

Two nine-pin sockets are used to communicate with the PowerLab (they are marked 'I²C Bus': a 'bus' is simply an information transmission connection such as connectors and cabling). These sockets in conjunction with the proper cables allow multiple front-ends to be used independently with one PowerLab: power and control signals to connected front-ends come from the PowerLab. Multiple front-ends can be connected to each other in series, 'output to input'. This is discussed in detail in Chapter 2.

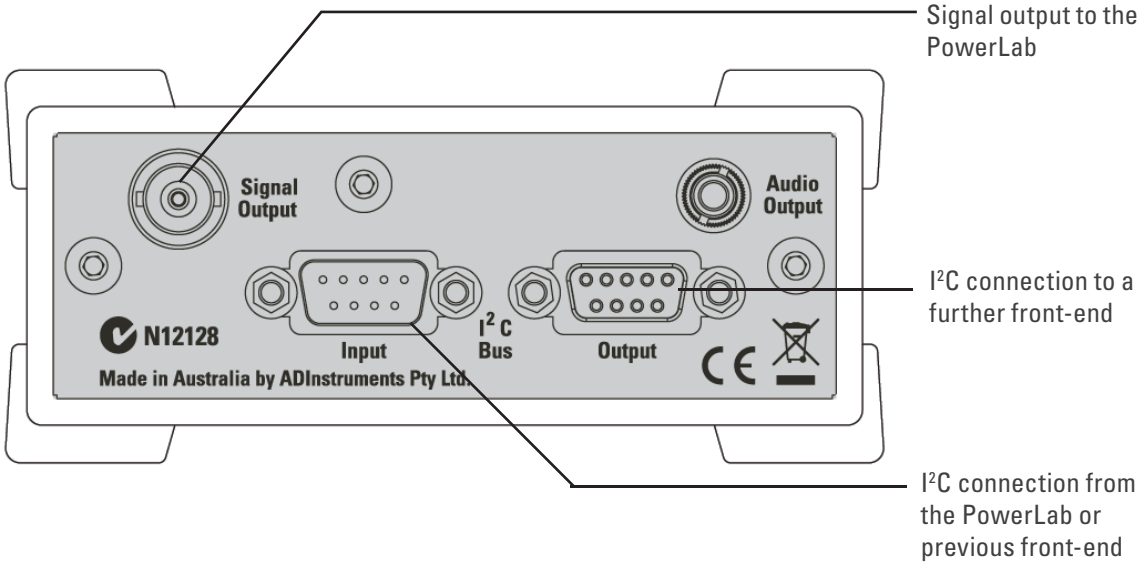

Figure 3–2 The back panel of the Animal Bio Amp

Signal Output Socket

The BNC socket labeled Signal Output is used to connect the Animal Bio Amp to one of the analog input channel sockets on the front of the PowerLab. The supplied BNC-to-BNC cable is used for this purpose.

Audio Output Socket

The Animal Bio Amp has an audio monitor output that can be used with a wide range of headphones or externally powered speakers. The 3.5 mm stereo socket is wired to provide mono sound (the same signal to a set of stereo speakers or headphones. This audio output is of particular use when monitoring bursts or nerve activity.

Connecting to the PowerLab

To connect a front-end, such as your Animal Bio Amp, to the PowerLab, first make sure that the PowerLab is turned off. Failure to do this may damage the PowerLab, the Animal Bio Amp, or both.

Single Front-end

Connect the I²C output of the PowerLab to the I²C input of the front-end using the I²C cable provided. Figure 3–3 shows how to connect up a single front-end to your PowerLab.

Check that the plugs for the I²C bus are screwed in firmly. Check the BNC cable for firm connections as well. Loose connectors can cause erratic front-end behavior, or may cause the front-end to fail to work at all. The BNC cable can be tucked under the front-end to keep it out of the way if desired. Once the Animal Bio Amp is connected, turn the PowerLab on and launch LabChart.

Figure 3–3 Connecting the Animal Bio Amp front-end to the PowerLab

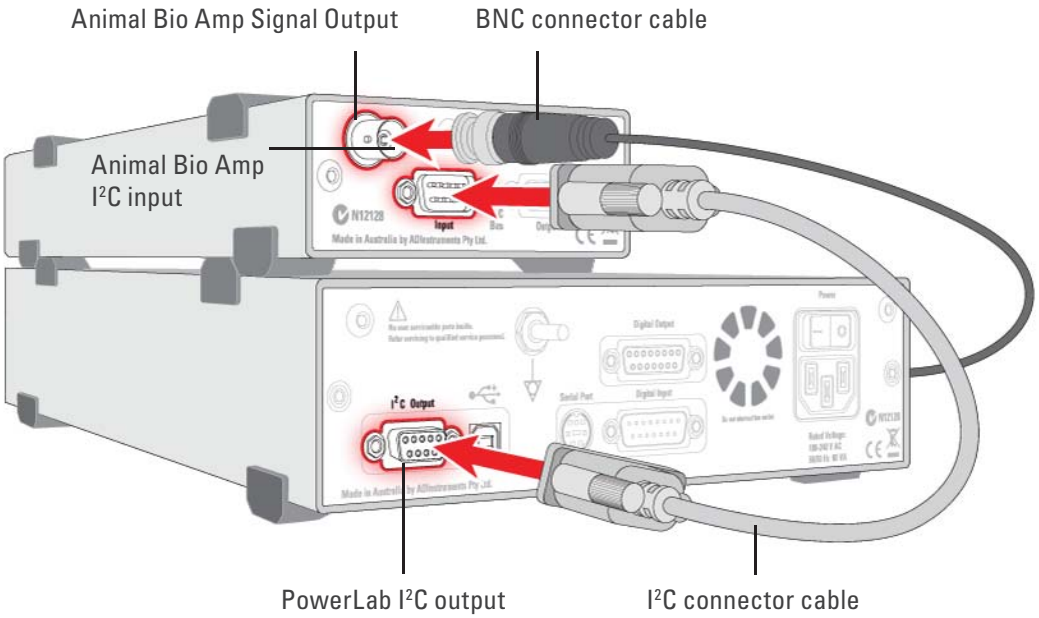

Multiple Front-ends

Multiple front-ends can be connected up to a PowerLab; up to sixteen, depending on the number of input channels on the PowerLab. The initial front-end should be connected as shown in Figure 3–3. The remainder are daisy-chained via I²C cables, connecting the I²C output of the last connected front-end to the I²C input of the front-end to be added (see Figure 2–2). The BNC cable for each front-end is connected to one of the analog inputs of the PowerLab. Note that signal degradation can be expected if multiple Bio Amps are connected to a single subject.

Using LabChart

When the Animal Bio Amp is connected to a channel and successfully installed, the **Input Amplifier...** menu command from the Channel Function pop-up menu in LabChart is replaced by the **Bio Amp...** menu command. In Scope, the **Input Amplifier...** button in the Input A (or Input B) panel is replaced by the **Bio Amplifier...** button.

If the application fails to find a front-end attached to a channel, the normal **Input Amplifier...** command or button remains. If you were expecting a connected front-end,

you should close the program, turn everything off, check the connections, then start things up again.

Note: Leaving the PowerLab on while changing connections can damage the PowerLab, the Animal Bio Amp, or both.

Choosing the **Bio Amp...** menu command will bring up the Bio Amp dialog, which replaces the Input Amplifier dialog for the channel. The LabChart Help Center has further details on the Input Amplifier dialog, and explain some of the software terms used here.

The Bio Amp dialog

The Bio Amp dialog allows software control of the various amplifiers and filters in the Animal Bio Amp (and PowerLab) for a channel. The signal present at that channel's input is displayed so that you can immediately see the effects of any changes. Once you have changed the settings in the dialog, click **OK** to apply the changes. The channel that the dialog applies to is shown next to the arrows, and the channel title or axis label (if any) is shown along the vertical Amplitude axis.

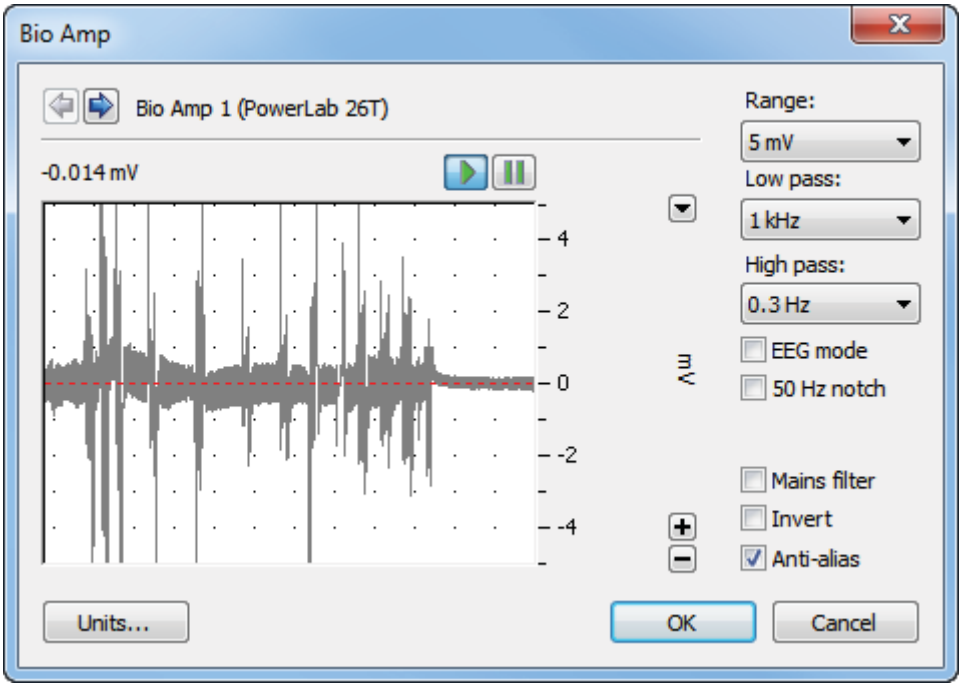

Figure 3–4 The Bio Amp dialog for LabChart for Windows (the Macintosh version is similar).

Signal Display

The input signal is displayed so that you can see the effect of changing the settings — no data is actually recorded when setting up the Animal Bio Amp. The average signal value is displayed at the top left of the display area. Slowly changing waveforms will be represented quite accurately, whereas quickly changing signals will be displayed as a solid dark area showing only the envelope (shape) of the signal formed by the minimum and maximum recorded values.

Range

The Range pop-up menu lets you select the input range or sensitivity of the channel — the combined range of the Animal Bio Amp and the PowerLab. Changing the range in the Bio Amp dialog is equivalent to changing it in the Chart or Scope window (all dialog changes are made in the main window after clicking **OK**). For the Animal Bio Amp, the default setting is 100 mV, and the ranges go down to 5 µV in 14 steps.

EEG Mode

The EEG Mode changes the available filters of the Animal Bio Amp to suit EEG applications. When this checkbox is on, the High Pass pop-up menu gives filter settings of 0.03, 0.1, 0.3 and 1 seconds, and the Low Pass pop-up menu gives filter settings of 3, 10, 30, 60, and 120 Hz. It is a convention in EEG to deal with high-pass filter settings in terms of seconds (giving the time constant of the first-order filter).

Filtering

The Animal Bio Amp provides signal filtering options that can be adjusted to suit your requirements. The default settings are appropriate to the signals usually measured, which tend to be of lower frequency.

The notch filter and the mains filter are used to remove excessive mains frequency interference. The high-pass filter limits the bandwidth of low-frequency signals and the low-pass filter limits the bandwidth of high-frequency signals.

Not all possible combinations of high-pass and low-pass filters are available, for instance, if the 5 kHz low-pass filter is selected, then high-pass filtering cannot be below 1 Hz.

Notch Filter. Click the Notch checkbox to turn the notch filter on and off (it is on when checked). The notch filter is set to either 50 or 60 Hz depending on the power line voltage (mains) frequency. It provides 32 dB of attenuation to remove electrical interference, thus reducing the effect of 50/60 Hz signals that can be picked up by long patient leads.

Mains Filter. Select or deselect the Mains filter checkbox to turn the mains filter on and off. The mains filter allows you to remove interference related to the mains frequency (both fundamental and harmonic frequencies). This is an adaptive filter. It adjusts to filter the interference by tracking the input signal for a second, creating a template of the interfering frequencies and then subtracting this template from the input signal. Because of this, in general, using the mains filter is better than using the notch filter. However, the mains filter does have some limitations, such as not being useful for very short recordings of less than one second. More details on the mains filter can be found in the **LabChart Help Center**.

High-Pass Filtering. There are normally five options in the High Pass pop-up menu: 0.1, 0.3, 1, 3 and 10 Hz. When the **EEG Mode** checkbox is on, four options are provided in the **High Pass** pop-up menu: 0.03, 0.1, 0.3 and 1 seconds. (Units of seconds give the time constant of the first-order filter.) When any of the options is chosen, a high-pass filter removes any DC components and attenuates those frequency components below the AC filter frequency from the signal. This is useful to remove slowly changing baselines, such as motion or respiration artifacts, commonly found in ECG (EKG) recordings.

Low-Pass Filtering. The Low Pass pop-up menu normally gives a choice of six low-pass filters to remove high-frequency components from an input signal: 50, 100, 200 and 500 Hz, and 1 and 5 kHz. When the **EEG Mode** checkbox is on, five options are provided in the **Low Pass** pop-up menu: 3, 10, 30, 60 and 120 Hz. These settings are useful to eliminate high-frequency components, such as noise, and to prevent aliasing in the recorded signal.

Anti-alias. Click the **Anti-alias** checkbox to turn the anti-aliasing filter on and off. This applies a low-pass filter that attenuates frequencies in the incoming signal that are greater than or equal to half the sampling frequency. This filter helps to eliminate aliasing, in which such frequencies 'fold down' to lower frequencies, and the recorded waveform appears quite different from the actual signal.

Inverting the Signal

The **Invert** checkbox allows you to invert the signal on the screen. It provides a simple way to change the polarity of the recorded signal without having to rewire a circuit or reconnect to the signal. Select the **Invert** checkbox to change the signal polarity.

Units

Click **Units...** to display the Units Conversion dialog, with which you specify the units for the channel and, using waveform measurements, calibrate the channel. Units conversion is not normally required for measurements taken using the Animal Bio Amp, but is provided just in case.

When the button is clicked, the waveform currently in the data display area of the dialog is transferred to the data display area of the Units Conversion dialog. (Use the Pause button to capture any specific signal that you want to use.) The units conversion only applies to subsequently recorded signals, so it is more limited than choosing **Units Conversion...** from a Channel Function pop-up menu, as it does not allow the conversion of individual blocks or pages of data. For more information about units conversion, see the **LabChart Help Center**.

Using the Animal Bio Amp

This section looks at the use of the Animal Bio Amp for measurements, describes the input connection in detail, and looks at how to avoid some common problems when setting up. It is recommended that you read the material in this section before you attempt to record biological signals with the Animal Bio Amp, especially if you intend to use your own cables or are unsure about how to connect to the Animal Bio Amp.

The Animal Bio Amp amplifies the signal from a biological signal source so it can be used by the PowerLab, and provides appropriate filtering. The tasks listed below, and the basics of setting up measurement, are covered in detail in standard electrophysiology texts. Note that signal degradation can be expected if multiple Bio Amps are connected to a single subject.

Some Suitable Uses

This version of the Animal Bio Amp [FE136] has been designed to measure a wide variety of biological signal sources. Some of the tasks for which it is suitable include:

ECG. Electrocardiogram (also referred to as EKG); a recording of the electrical currents that constitute the cardiac action potential.

EOG. Electro-oculogram; a recording of the electrical activity of the muscles which control movement of the eyeball. For bilateral measurement, a Dual Bio Amp [FE135] is recommended, although two Animal Bio Amps can be used. The lowest possible high-pass filter setting is recommended for EOG measurements.

ERG. Electroretinogram; a recording of the electrical currents produced in the retina by a light stimulus. Two Animal Bio Amps are required for bilateral measurement.

EMG. Electromyography (surface electrode electromyography); a recording of the electrical activity of a muscle, using surface or needle electrodes: voluntary, M-wave (nerve stimulation), and so on.

EEG. Electroencephalogram; a recording of the electrical activity of the brain. The Animal Bio Amp is suitable for both 'biofeedback' and clinical types of EEG recording, if the environment is electrically quiet.

Cortical Evoked Potentials. Averaged recordings of the electrical activity of the brain when subject to stimulation: visual evoked response, auditory evoked response, and somatosensory response. This should be done with signal averaging, using Scope View.

SNAP. Sensory nerve action potentials; a recording of evoked response in stimulated nerves. This is usually done with signal averaging, using Scope.

Slow Waves. For some smooth muscle studies; recording the long-term electrical activity involved in involuntary muscle contractions.

Some Unsuitable Uses

The Animal Bio Amp is not recommended for work requiring high-impedance electrodes or using a high bandwidth. Some of the tasks for which it is not really suitable include:

- Intracellular micropipette recordings. Recordings from a very fine, electrolyte-filled tube inserted into a nerve or muscle cell. These require an electrometer amplifier.
- Any biopotential recordings requiring low input capacitance and a driven guard circuit.

The Animal Bio Amp Input

Connections are made to the Animal Bio Amp using the three shrouded 1.5 mm male pin sockets on the front panel. The sockets are of a sort commonly used with life science connection leads, and their arrangement is shown below.

Three cables are provided and each is terminated with a miniature alligator clip suitable for use with a wide variety of electrodes (not supplied).

Figure 3–5 The connectors for each input of the Animal Bio Amp

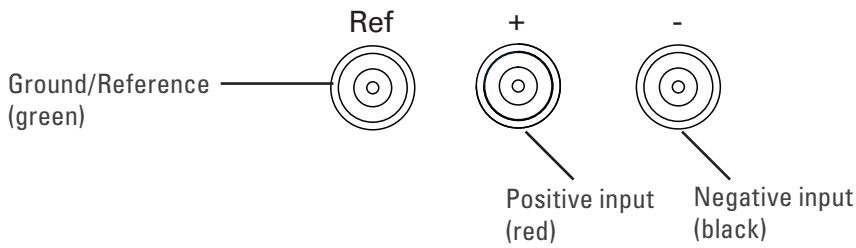

The sockets provide two pins for a differential input signal (+ or red, – or black), and an input for an isolated Ground/reference (Ref or green). The Ground/reference electrode should always be attached to the subject under investigation (or to the recording preparation), providing a zero reference for the differential amplifier. Then the active (+) and reference (-) electrodes should be securely attached to the subject or recording preparation, for example, ECG recording leads on opposite sides of the chest, or needle electrodes at different sites over a nerve.

Note: The Animal Bio Amp should never be used on humans. For human connection, the Bio Amp [FE132] or Dual Bio Amp [FE135] should be used with their associated approved subject cables.

Technical Aspects

This section describes some of the important technical features of the Animal Bio Amp. It describes the capabilities of the Animal Bio Amp, and its suitability for particular purposes. Be advised that user modification of the equipment voids the warranty agreement.

Technical Description

As with other ADInstruments front-ends, all internal functions of the Animal Bio Amp are controlled from the PowerLab through a special communications connector called the I^2C bus. This connection also supplies power to the Animal Bio Amp. Front-ends are also connected to the analog input channels of the PowerLab via a BNC-to-BNC cable, through which the amplified and filtered signal is sent to the PowerLab. The overall operation of the Animal Bio Amp can be better understood by referring to Figure 3–6.

The input amplifier of the Animal Bio Amp starts with an electrically isolated differential amplifier. The output of this amplifier is fed into a low-noise demodulator and then to a programmable gain stage, before being fed across an isolation transformer to the non-isolated circuitry. Control of the isolated gain is provided via a high-isolation-voltage optocoupler. An auto-restore circuit monitors the level of the input signal and restores the input before the signal produces amplifier 'blocking'. Isolated power comes from a second isolation transformer driven by a power oscillator circuit running at about 38 kHz.

The signal from the isolated input amplifier is synchronously demodulated and then fed to a programmable, switched-capacitor, high-pass filter. Any switching clock noise is filtered by the low-pass filter following this stage.

The signal then passes to the first non-isolated gain stage, where it is amplified 1, 10 or 100 times. A switched-capacitor notch filter follows (this is automatically set to 50 or 60 Hz depending on the mains frequency of your power supply). After this, the signal passes to the final programmable gain stage, where it is amplified 1, 2 or 5 times. The last part of the signal-conditioning circuitry is the low-pass filter.

The output of the Animal Bio Amp is buffered with an amplifier with a fixed gain (nominally X 1.66), to compensate for gain differences through the previous stages of the device. An audio signal output, capable of driving headphones or powered speakers, is provided by tapping off the output stage and buffering it.

The control for the various filters and gain stages in the Animal Bio Amp is provided by on-board microprocessors, which also communicate with the PowerLab over the I^2C bus.

Note that the Animal Bio Amp is an extremely sensitive instrument, and it is important that under no circumstances should you try to repair or adjust it yourself. If you experience problems with the Animal Bio Amp, it should be returned to your ADInstruments representative for repair under the terms of your Warranty & Licensing Agreement.

Figure 3–6
Block diagram of the Animal Bio Amp

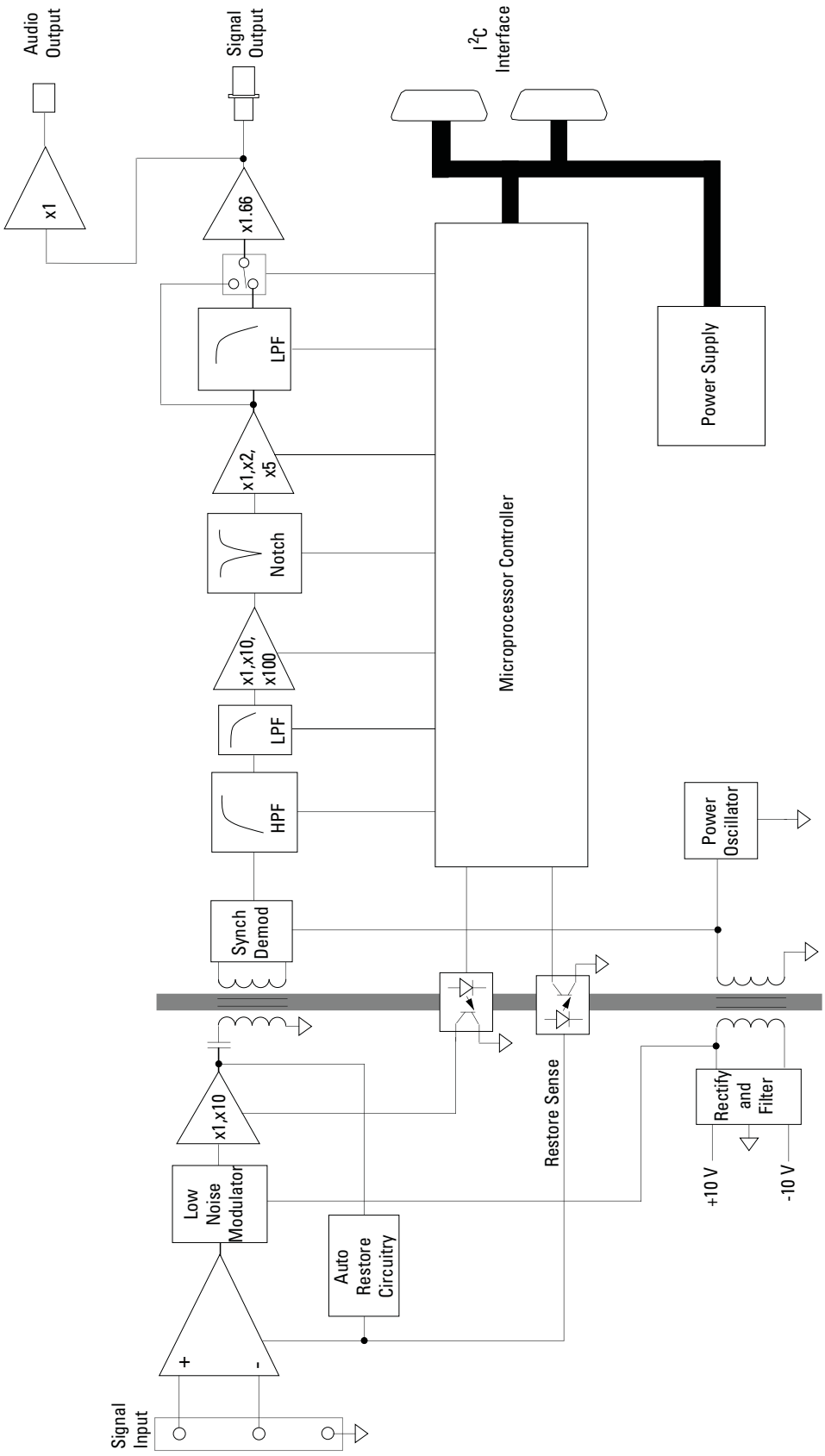

Troubleshooting

This section describes some problems that may arise when using the Animal Bio Amp with the PowerLab. If you have any trouble getting the Animal Bio Amp to work with the PowerLab, use this section to try and isolate and cure the problem. If the solutions here do not work, refer to earlier chapters, the **LabChart Help Center**, and the *Owner's Guide* for your PowerLab for possible solutions. If none of the solutions here or elsewhere are of help, then consult your ADInstruments representative.

Although the PowerLab and the Animal Bio Amp are designed to be very reliable, there may be occasions when they do not appear to function correctly. In the majority of cases, the problem can be fixed by checking connections and starting up the application again. Very rarely will there be an actual problem with the Animal Bio Amp or the PowerLab itself. This following section should help you determine what kind of fault you have and find an appropriate solution.

Problems and Solutions

The online indicator fails to light when the application is opened

The PowerLab is off or the power is switched off at the wall, the power cable is not connected firmly, or a fuse has blown.

- Check switches, power connections, and fuses.

The BNC-to-BNC cable from the Animal Bio Amp to the analog input channel of the PowerLab is not connected, has been connected incorrectly, or is loose.

- Check that the cable is firmly connected at the back of the front-end and to the PowerLab input.

The I^2C cable from the Animal Bio Amp to the PowerLab is not connected, has been connected incorrectly, or is loose.

- Check to see that the I^2C cables are firmly seated and screwed in. Start up again to see if this has fixed the problem.

You are using an early version of LabChart.

- Upgrade to the current version of the software — contact your ADInstruments representative.

The BNC or I^2C cable is faulty.

- Replace the cable and try again. Immediately label all cables proved faulty so that you don't use them again by accident.

The Animal Bio Amp is faulty.

- This is the least likely event. If you have tried the above suggestions and still cannot get the Animal Bio Amp to work properly, then try using it on another PowerLab if you have access to one. If the online indicator fails to light on the second PowerLab, the unit may be faulty and should be returned for repair.

The Bio Amp... command does not appear in LabChart

The BNC-to-BNC cable from the Animal Bio Amp to the analog input of the PowerLab might not be connected, has been connected incorrectly (to the wrong input, for instance), or is loose.

- Check that the cable is firmly connected at the back of the front-end and to a PowerLab input.

The I^2C cable from the Animal Bio Amp to the PowerLab is not connected, has been connected incorrectly, or is loose.

- Check to see that the I^2C cables are firmly seated and screwed in. Start up again to see if this has fixed the problem.

You are using an early version of LabChart.

- Upgrade to the current version of the software — contact your ADInstruments representative.

The BNC or I^2C cable is faulty.

- Replace the cable and try again. Immediately label all cables proved faulty so that you don't use them again by accident.

The Animal Bio Amp is faulty.

- This is the least likely event. If you have tried the above suggestions and still cannot get the Animal Bio Amp to work properly, then try using it on another PowerLab if you have access to one. If the online indicator fails to light on the second PowerLab, the unit may be faulty and should be returned for repair.

The trace will not zero properly when adjusting high-pass filtering

The Animal Bio Amp is receiving signals at a level that has saturated the input amplifier, resulting in a large offset. This is normally due to poor contact between the electrodes and the subject.

- Check the connections for proper contact and try again.

The signal appears to display a constant amplitude oscillation

Frequency interference from power lines can become superimposed on the biological signal you are measuring.

- You can use the internal notch filter in the Animal Bio Amp to remove excessive line voltage frequency interference (use the checkbox in the Bio Amp dialog).

If you are using cables and leads that were not supplied with your Animal Bio Amp, they may be of low quality.

- Check to make sure that you are using only high-quality cables, and that all soldered joints are in good condition.

Sometimes the alligator clips do not make good electrical contact with the electrodes.

- Check to make sure that the electrodes are clean and dry where they contact the alligator clips. Refresh the electrode surface by polishing with a fine abrasive cloth to remove any oxide layer, if necessary. Make sure there is no grease, oil or wax covering the electrodes.

The signal is noisy at lower ranges

This is probably the amplified noise from the electrodes and not a fault, as such. In addition, there is noise that cannot be avoided by any amplifier (called 'thermal' or 'Johnson-Nyquist' noise).

- Set the low-pass filter to remove the noise. (But be careful, since important components of the signal could also be attenuated.)

This could be due an electrically noisy environment, particularly if there is some equipment that produces a radio frequency that interacts with the Animal Bio Amp modulator, giving a heterodyne effect.

- Turn off pieces of unnecessary equipment to try and isolate the cause, then either leave the equipment off, or, if possible, move the subject or equipment outside the area of any interfering field.
- At the lowest amplification ranges cables may have to be shortened, as long cables will tend to act as radio receivers.

Problems with the Front-end Driver

On starting up, LabChart presents a dialog indicating that it could not find the driver

The Bio Amp driver is not installed on the computer you are using.

- Reinstall the LabChart software from your Installer CD or the adinstruments.com website.

On starting up, LabChart presents a dialog indicating that the driver is incompatible

You are probably trying to use the Animal Bio Amp with an old version of software.

- Reinstall the LabChart software from your Installer CD or the adinstruments.com website. If you do not have a copy of the current version of software, please contact your ADInstruments representative.

Specifications

Input

Connection type:	Three shrouded 1.5 mm male pin sockets
Input impedance:	200 MΩ differential
Safety:	Approved to IEC 60601-1 Standard (BF rating)
EMC:	Approved to EN61326-1:2006 Standard
Input leakage current:	< 3 μA_{rms} @ 240 V, 50 Hz
	< 2 μA_{rms} @ 120 V, 60 Hz
DC blocking:	± 1 V
Baseline restore:	Automatic

Amplification

Configuration: Isolated differential channel with isolated ground reference

Input range: ± 5 µV to ± 100 mV full scale in 14 steps

(combined PowerLab and Bio Amp)

Full Scale	Resolution
± 100 mV	50 µV
± 50 mV	25 µV
± 20 mV	10 µV
± 10 mV	5 µV
± 5 mV	2.5 µV
± 2 mV	1 µV
± 1 mV	500 nV
± 500 µV	250 nV
± 200 µV	100 nV
± 100 µV	50 nV
± 50 µV	25 nV
± 20 µV	10 nV
± 10 µV	5 nV
± 5 µV	2.5 nV

Mid-band gain accuracy: ± 1.5% (all ranges, within Bio Amp)

Non-linearity: < 0.2% within range

Noise at various bandwidths: 1 Hz to 5 kHz: < 1.3 μV_{rms} (< 8 µV peak-to-peak)

	0.3 Hz to 1 kHz: < 0.6 μV_{rms}
	0.1 Hz to 100 Hz: < 0.35 μV_{rms} (@ 200 samples/second)
CMRR:	> 85 dB (typically, 1–60 Hz)
IMRR:	> 130 dB (to true earth, 50–60 Hz)

Filtering

Low-pass filter:	Fourth-order Bessel filter, ± 3% accuracy
	Low-pass options: Software selectable.
	Standard: 50, 100, 200 and 50 Hz, and 1 and 5 kHz (all at –3 dB);
	EEG mode: 3, 10, 30, 60 and 120 Hz
High-pass filter:	First-order filter, ± 0.25% accuracy
	High-pass options: Software selectable.
	Standard: 0.1, 0.3, 1, 3 and 10 Hz (all at –3 dB);
	EEG mode: 0.03, 0.1, 0.3 and 1 seconds
Notch filter:	Second-order filter, –32 dB attenuation;
	50 or 60 Hz frequency (automatic sensing)

Output

Signal:	± 2.0 V standard; (within ± 4.0 V over range)
Audio:	3.5 mm stereo jack; ± 200 mV
	Suitable for headphones or powered speakers

Control Port

I^2C port:	Provides control and power. Interface communications rate of ~50 kbits/s.

Physical Configuration

Dimensions (h × w × d):	55 mm × 120 mm × 260 mm (2.2" × 4.7" × 10.2")
Weight:	1.2 kg (2 lb 11 oz)
Power requirements:	< 2 W
Operating conditions:	5–35 °C
	0–90% humidity (non-condensing)

ADInstruments reserves the right to alter these specifications at any time.

Chapter 4

Bio Amp

This chapter provides an overview of the Bio Amp [FE132], Dual Bio Amp [FE135], Quad Bio Amp [FE234] and Octal Bio Amp [FE238]. The Bio Amp allows the PowerLab system to record biological signals, such as ECGs, EMGs, and EEGs from humans or animals.

WARNING:
Refer to Intended Use statement on page 1 of this Owner's Guide before use.

Bio Amp Safety Instructions

The Bio Amp inputs displaying safety symbols are electrically isolated from the mains supply in order to prevent current flow that may otherwise result in injury to the subject. Several points must be observed for safe operation of the Bio Amp:

- The Bio Amp [FE132], Dual Bio Amp [FE135] and PowerLab units with a built-in Bio Amp are supplied with a 3-lead or 5-lead Bio Amp subject cable and lead wire system. The Octal Bio Amp [FE238] and Quad Bio Amp [FE234] are supplied with unshielded lead wires (1.8m). Bio Amps are only safe for human connection if used with the supplied subject cable and lead wires.
- All Bio Amp front-ends and PowerLab units with a built-in Bio Amp are not defibrillator-protected. Using the Bio Amp to record signals during defibrillator discharges may damage the input stages of the amplifiers. This may result in a safety hazard.

- Never use damaged Bio Amp cables or leads. Damaged cables and leads must always be replaced before any connection to humans is made.

The Bio Amp front-ends

All Bio Amps consist of electrically isolated, differential input AC amplifiers with common isolated ground connections (FE234/238 support both AC and DC coupled mode). The number of amplifiers corresponds to the number of Bio Amp channels. For example, the Dual Bio Amp has two amplifiers with a shared ground connector and input socket, and the Octal Bio Amp has eight differential amplifiers with a shared ground connector and separate inputs. For multiple biological recordings (more than two) from a single subject, it is recommended that you use a multi-channel Bio Amp rather than "daisy-chaining" multiple Bio Amps.

The Front Panel

The front panel of a Bio Amp has a single input and an indicator light.

The front panel of a Dual Bio Amp has a single input, two indicator lights and an audio output connector.

The front panel of the Quad Bio Amp has nine single-ended 1.5mm sockets consisting of four red connectors, four black connectors and a single green connector.

The front panel of the Octal Bio Amp has seventeen single-ended 1.5 mm sockets consisting of eight red connectors, eight black connectors and a single green connector.

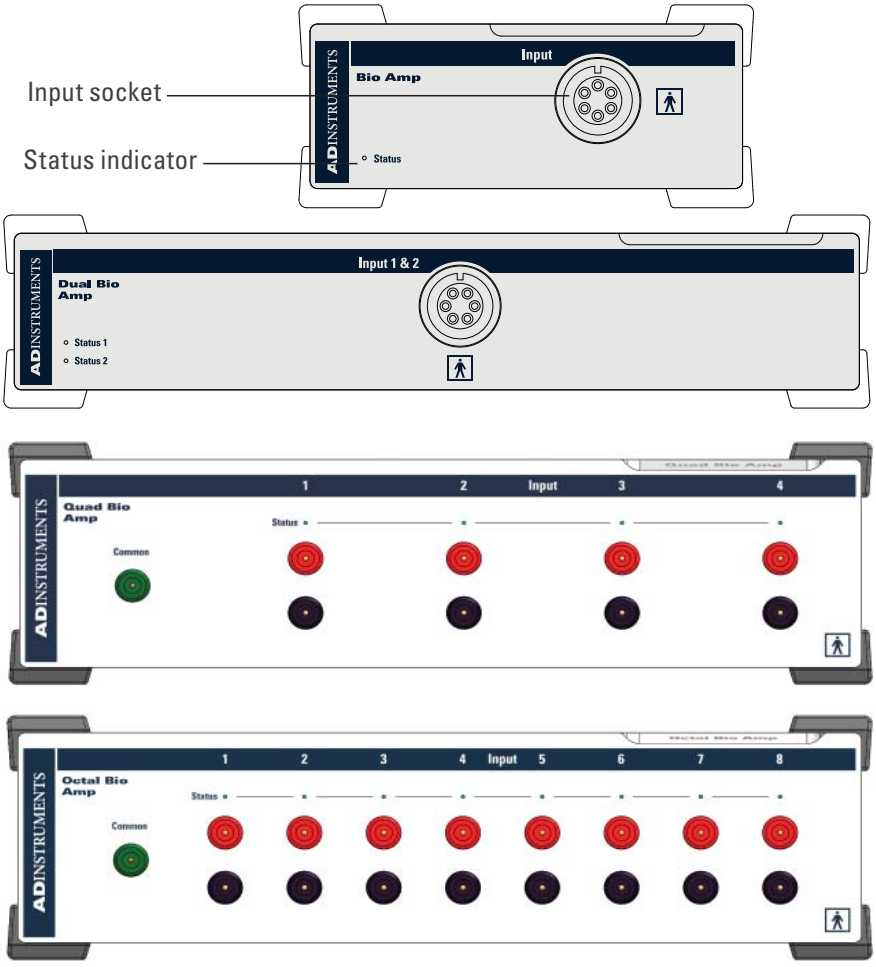

Figure 4–1
The front views of the Bio Amp, Dual Bio Amp, Quad Bio Amp and Octal Bio Amp

WARNING: When used in ambient temperatures of 38 degrees C and above, do not touch the Bio Amp enclosure for more than a minute continuously.

The Input Socket

Connections are made to the Bio Amp and Dual Bio Amp using the six-pin socket on the front panel. The socket is physically and electrically isolated from the low-voltage mains-supply circuitry of the PowerLab, and the input connections are isolated internally, by isolation circuitry. The socket is of a sort commonly used with ECG-type cables and leads, such as the Bio Amp cable and leads with which your Bio Amp is supplied (Tronomed D-1340 or Tronomed D-1540). The single Bio Amp and Dual Bio Amp have different pin arrangements, so their Bio Amp cables are not interchangeable. The socket and connections to it are discussed in more detail later on.

Connections are made to the Quad/Octal Bio Amp using individual lead wires (supplied with every unit) and a common ground, rather than using a single multi-pin socket. Each of the Bio Amp inputs has one red and one black connector and an indicator light. The green connector is a shared ground connection across all eight inputs in Octal and four in Quad.

The Status Indicator

The status indicator light of a single Bio Amp is located at the bottom left of the front panel. The status indicator lights of an Octal and Quad Bio Amp are located above the pair of red and black connectors of each input on the front panel.

When an ADInstruments application such as LabChart starts, the status indicators should flash briefly and then remain green, indicating that the program has found the front-end, checked and selected it, and is ready to use it. If a status indicator does not turn on and stay on when the application starts, it is most likely that the front-end is not connected properly.

The Back Panel

The back panel of the Bio Amp provides all the sockets required to connect the front-end to the PowerLab and to other front-ends.

Audio Out Socket

Bio Amps have audio monitor outputs on the rear panel that can be used with standard headphones or externally powered speakers. The 3.5mm headphone socket provides sound output from a software-selected data channel. The audio output may be of use when monitoring nerve firings to control the placement of electrodes, for instance.

I^2C Input and Output

The Bio-Amp communicates with the PowerLab via the 9 Pin I2C Input connector. This connector can either be connected directly to a PowerLab or to the ‘I2C Output’ connector of another Front-End. Up to 16 Front Ends can be ‘daisy chained’ in this fashion. More details can be found in the ‘Connecting to the PowerLab’ section in Chapter 2. The I2C socket allows multiple front-ends to be used independently with one PowerLab. Power and control signals to connected front-ends come from the PowerLab.

Figure 4–2
The rear views of the Bio Amp, Dual Bio Amp, Quad Bio Amp and Octal Bio Amp

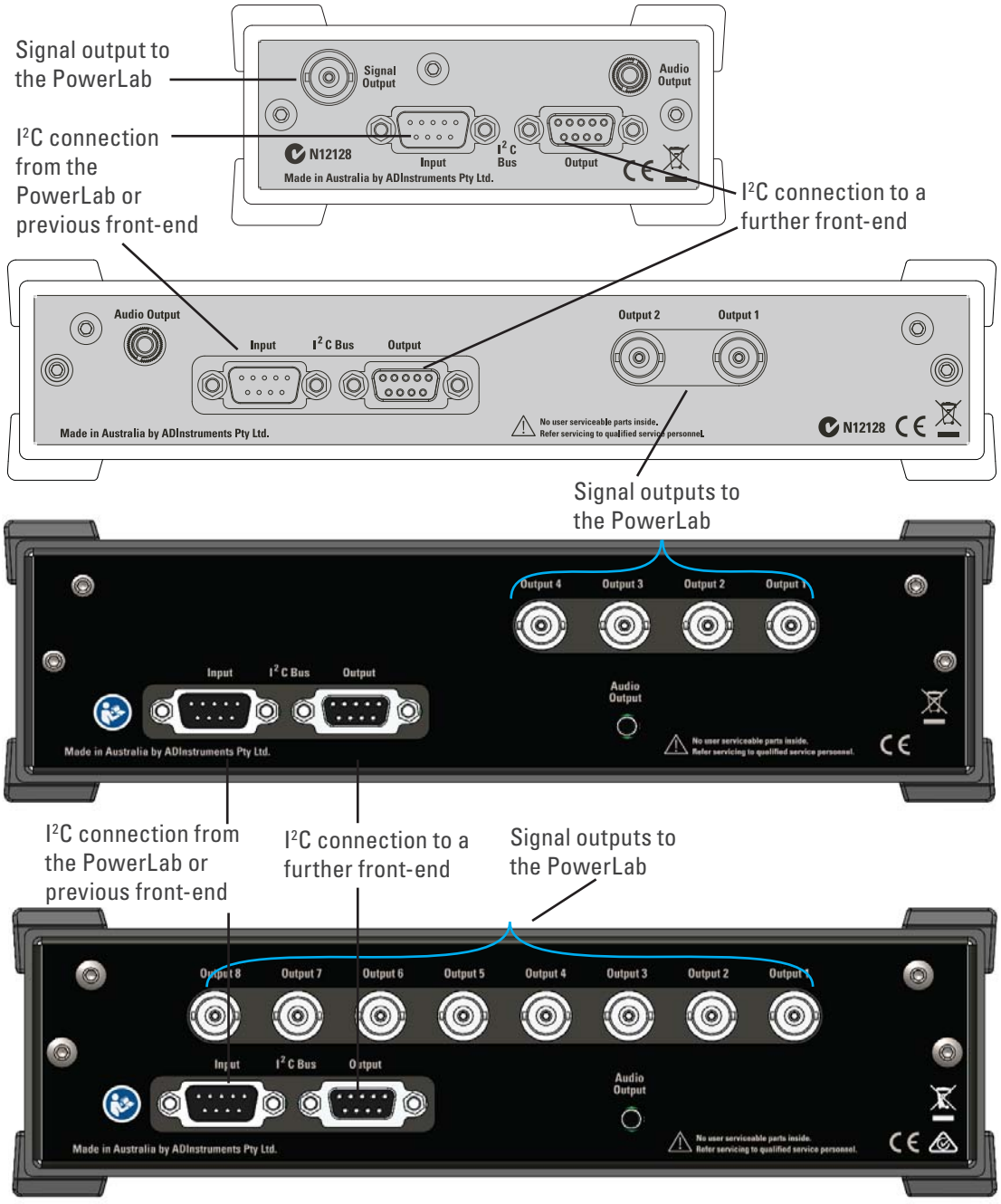

Analog Output Sockets

The BNC sockets on the back panel of the Bio Amps provide the signal outputs to connected analog input sockets of the PowerLab. The sockets are labeled Signal Output on a single Bio Amp and Output 1 to Output n on a multi-channel Bio Amp. A BNC-to-BNC cable is supplied for each connection. It is recommended that, to avoid confusion, you match the Bio Amp output number with the corresponding PowerLab input connector.

Audio Out Socket

The single Bio Amp has an audio monitor output on the back panel that can be used with a wide range of headphones or externally powered speakers. The 3.5 mm stereo socket provides mono sound. The audio output may be of use when monitoring nerve firings to control the placement of electrodes, for instance.

WARNING: The FE132, FE135, FE136 and FE185 amplifiers have only been assessed as compliant with IEC60601-1 safety standard when used with a 35 series PowerLab

Connecting to the PowerLab

To connect a Bio Amp to the PowerLab, first ensure that the PowerLab is turned off. Failure to do this may damage the PowerLab, the Bio Amp, or both.

Connect each signal output on the rear panel of the Bio Amp, Dual Bio Amp or Octal Bio Amp to an analog input on the front panel of the PowerLab using a BNC cable. Connect the I²C output of the PowerLab to the I²C input of the front-end using the I²C cable provided. Figure 4–3 shows how to connect up a single front-end to your recording unit.

Figure 4–3 Connecting a Bio Amp to the PowerLab

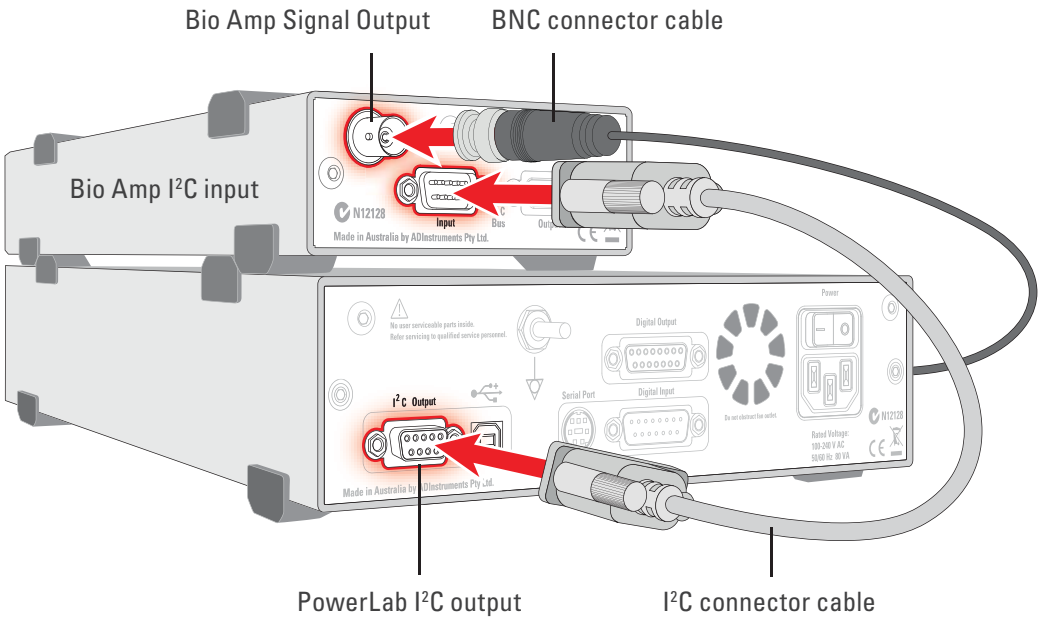

Check that the plugs for the I²C bus are screwed in firmly. Check the BNC cable for firm connections as well. Loose connectors can cause erratic front-end behavior, or may cause the front-end to fail to work at all. The BNC cable can be tucked under the front-end to keep it out of the way if desired.

Multiple separate front-ends can be connected to a PowerLab. The number of front-ends that can be connected depends on the number of input channels on the PowerLab, since each signal output from a front-end connects to one of the analog inputs of the PowerLab. The initial front-end should be connected with the I²C cable as shown in Figure 4–3. The remainder are daisy-chained via I²C cables, connecting the I²C output of the last connected front-end to the I²C input of the front-end to be added, as shown in Figure 2–2.

Using More Than One Bio Amp

If you intend to record with more than one channel using a common Ground/reference, such as when recording from a single subject, it is recommended that you use a Dual Bio Amp rather than two Bio Amps, or that you use an Quad/Octal Bio Amp rather than two or more Dual Bio Amps. Some interaction can take place between individual Bio Amp

front-ends, causing up to 10 µV of induced low-frequency signal due to slight differences in frequency between the isolated power supplies.

For multiple channel recordings, using the Dual Bio Amp or the Octal Bio Amp avoids this problem because the Dual Bio Amp has two amplifiers with a shared Ground/reference connector and single input socket, and the Octal Bio Amp has eight differential amplifiers with a shared Ground/reference connector and separate inputs.

Supplied Accessories

Octal/Quad Bio Amp:

- MLA0310 Lead wires, unshielded
- MLAC27 Quad BNC-BNC cables
- MLAC02 DB9M- DB9M cable

The Bio Amp Cable

Connections should be made to the Bio Amp and Dual Bio Amp inputs using the supplied Bio Amp cable and leads. The cable plugs into the six-pin input socket on the front panel: a notch in the plug ensures that polarity is correct. Only the supplied Bio Amp cable and leads should be used. Other cables may not meet safety requirements.

Note: The single Bio Amp and Dual Bio Amp have different pin arrangements, so their Bio Amp cables are not interchangeable.

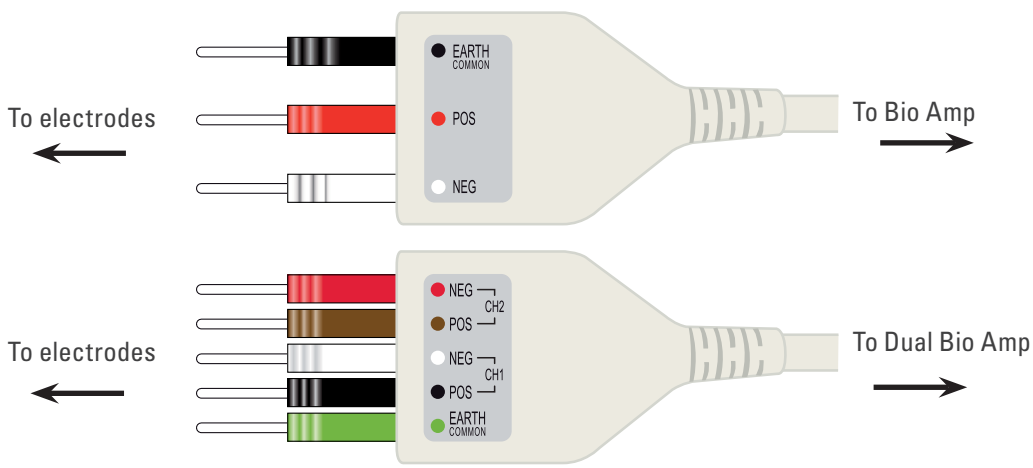

Figure 4–4 Bio Amp cable yokes, with leads attached: 3 leads for the Bio Amp, and 5 leads for the Dual Bio Amp

The single Bio Amp is supplied with a 3-lead Bio Amp cable and lead wires. The Dual Bio Amp is supplied with a 5-lead Bio Amp cable and lead wires; it uses a shared ground signal for its Bio Amp inputs. The supplied cables are of the type used for ECG or EMG studies: Tronomed D-1340 or Tronomed D-1540 cables respectively. The cable has a yoke with three or five sockets for the lead wires. Note that the active pins of a shielded cable are those closest to the label.

The lead wires supplied are of the type used for ECG studies. They click into place in the cable yoke, and have snap connectors at the other end to connect to typical ECG electrodes. The leads are color-coded for identification. The labels on the Bio Amp cable also have color spots to help sort out which cables connect where and what they are

measuring. (The colors are arbitrary, since the PowerLab system is for general-purpose recording.)

Connections to the Octal and Quad Bio Amp inputs can be made with the supplied lead wires. The input sockets are for unshielded, single-ended lead wires with a 2 mm inside diameter with 1.5 mm pins.

ADInstruments supplies other types of lead wires that connect to the Bio Amp cable yoke. Also available are disposable and reusable electrodes, electrode cream (for reusable electrodes), and abrasive gel, for lightly abrading the skin before the electrodes are attached.

The Bio Amp Cable Input

The Bio Amp cable, for the Bio Amp and Dual Bio Amp, plugs into the six-pin input socket on the front panel of the Bio Amp. A notch in the plug ensures that polarity is correct. Only the supplied Bio Amp cable and lead wires should be used as other cables may not meet safety requirements.

Note: The pin arrangement of the Bio Amp and the Dual Bio Amp is different; the Bio Amp cables are not interchangeable. (The Bio Amp is supplied with a 3-lead Bio Amp cable, whereas the Dual Bio Amp is supplied with a 5-lead Bio Amp cable.)

The Bio Amp has one connector: providing two pins for a differential input signal, a separate pin for the Ground/reference signal, and another connected to the cable's shield. The entire connector is physically and electrically isolated to ensure subject safety.

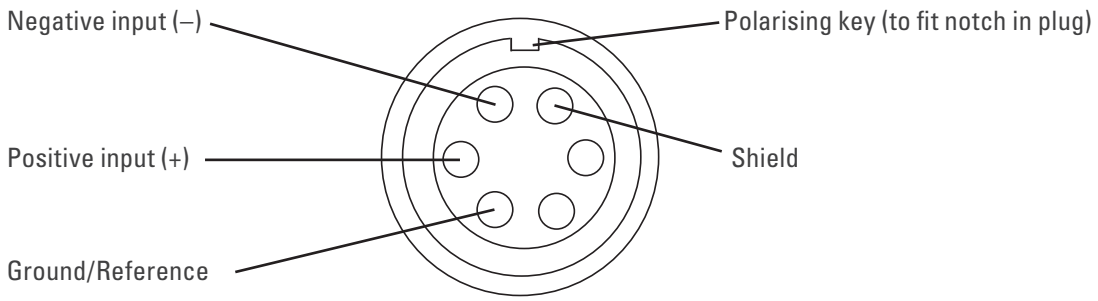

Figure 4–5 The pin assignments for the single Bio Amp input connector

The Dual Bio Amp has one common connector for two Bio Amp channels, nominally channels 1 and 2. The biological amplifiers both have differential inputs, a shared Ground/reference, and connection to the cable's shield. The entire connector is physically and electrically isolated to ensure subject safety.

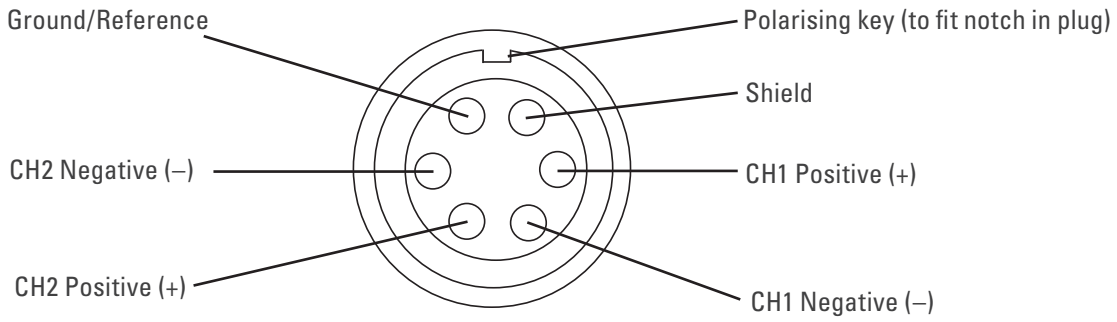

Figure 4–6 The pin assignments for the Dual Bio Amp input connector

The Octal Bio Amp has a pair of connectors for each of the eight Bio Amp inputs, and a single connector for the shared Ground/reference. The Quad has a pair of connectors for each the four Bio Amp inputs, and a single connector for the shared Ground/reference. The connectors are physically and electrically isolated to ensure subject safety. The Octal and Quad Bio Amps should be used with the supplied 1.8m unshielded lead wires.

Figure 4–7
The connectors for each input of the Octal/Quad Bio Amp

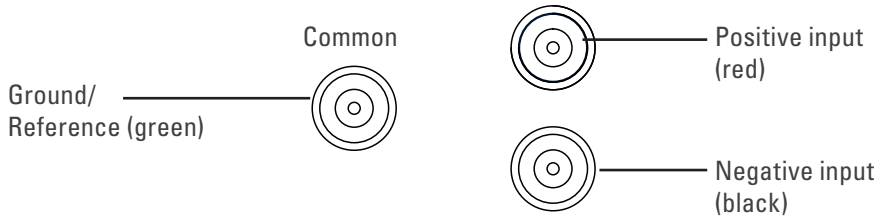

The Common lead must always be connected to the subject to ensure that the common-mode signal seen by the inputs is not unduly large. An unduly large common mode signal may lead to poor signal quality.

Shutdown Procedure: After use, the Bio Amp should be shut down by quitting LabChart and powering off the PowerLab

Using LabChart

Once the Bio Amp is connected, turn the PowerLab on and launch LabChart. When a Bio Amp is properly connected to the PowerLab, the **Input Amplifier...** menu command is replaced by **Bio Amp...** for the input channel to which it is connected.

If LabChart fails to find a front-end connected, the normal text remains. If you were expecting a connected front-end and see the normal text instead, you should quit the application, turn the PowerLab off and check the connections. Then restart the PowerLab and re-launch LabChart.

The documentation for LabChart does not cover front-end-specific features. These features are described in detail here for LabChart.

The Bio Amp dialog

The Bio Amp dialog (Figure 4–8 and Figure 4–9) allows software control of the combined input amplifiers and filters in the PowerLab and Bio Amp. The signal present at a channel's input is displayed in the preview area so that you can see the effects of changes in settings. Change settings in the dialog, then click the OK button to apply them.

The Bio Amp dialog appears when you choose **Bio Amp...** from a Channel Drop Down menu. To set up many channels quickly, open the **Setup > Channel Settings...** dialog. Here you can view all the channels that are turned on, and you can turn off

any unnecessary channels. Clicking on **Bio Amp...** in the Input Settings column of the Channel Settings dialog will also open the Bio Amp dialog.

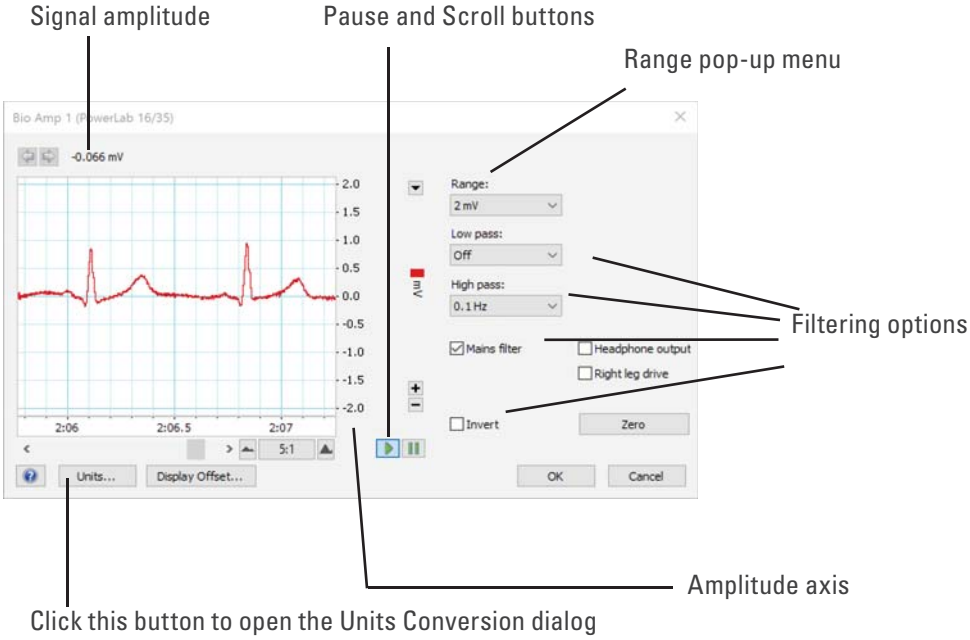

Figure 4–8 The Bio Amp dialog in LabChart for Windows for the Dual and Octal/Quad Bio Amps

Signal Display

The input signal is displayed so you can see the effect of changing the settings — no data are recorded while setting things up. The instantaneous signal value is shown above the display area.

Setting the Range

The Range pop-up menu lets you select the input range of the channel (combined range of the PowerLab and Bio Amp). Note that range is inversely related to gain (e.g, 100 mV range is the lowest gain and sensitivity setting). Changing the range in the Bio Amp dialog is equivalent to changing it using the arrow in the top right hand corner of the channel in the Chart View Window. Changing the hardware range setting should not be confusing with adjusting the y axis scaling using the + and - buttons on the left of each channel. The default setting (if you have not loaded a settings file) is 100 mV and the ranges go down to 5 µV in 14 steps (100 µV in 10 steps for Quad/Octal Bio Amps).

Filtering

The Bio Amp has low-pass, high-pass, and mains filter circuitry that can be adjusted to suit the application. The mains and notch filters remove excessive mains-frequency interference. The high-pass and low-pass filters provide bandwidth limiting of low-frequency and high-frequency signals respectively. Note that the settings for one filter type may restrict the possible settings for the other.

High-Pass Filtering. The High Pass pop-up menu gives a choice of high-pass filters. The high-pass filter removes frequencies below the chosen frequency and allows high frequencies in the signal. These filters are useful for removing slowly moving baselines, such as motion or respiration artifacts, particularly in ECG (EKG) recordings.

Low-Pass Filtering. The Low Pass pop-up menu gives a choice of low-pass filters. The low-pass filter removes frequencies above the chosen frequency and allows low frequencies in the signal. These filters are useful for removing high-frequency signals, such as noise, and to prevent aliasing in the recorded signal.

Notch Filter. Notch filtering is a hardware filter which is only supported on certain Bio Amps (FE/ML 132, 135, 136, 138). Select or deselect the Notch checkbox to turn the notch filter on and off. The notch filter is automatically set to either 50 or 60 Hz, depending on the power line voltage frequency being used by the PowerLab (the mains frequency). It provides approximately 32 dB of attenuation, thus reducing the effect of the 50 or 60 Hz signals that can easily be picked up by long leads.

Mains Filter. Select or deselect the Mains filter checkbox to turn the mains filter on and off. The mains filter allows you to remove interference related to the mains frequency (both fundamental and harmonic frequencies). This is an adaptive filter. It adjusts to filter the interference by tracking the input signal for a second. Because of this, in general, using the mains filter is better than using the notch filter but the mains filter does have some limitations. More details on the mains filter can be found in the LabChart Help Center.

Anti-alias. Anti-aliasing is a feature only supported when the Single and Dual Bio Amp (Octal and Quad not supported) is connected to 2/26, 4/26, 15T and 26T PowerLabs. Click the Anti-alias checkbox to turn anti-aliasing on and off. Aliasing occurs when a regular signal is digitized at too low a sampling rate, causing the false appearance of lower frequency signals. To prevent aliasing, the sampling rate must be at least twice the highest frequency in the incoming waveform. When aliasing of noise or signals is seen, or even suspected, the first action you should take is to increase the sampling rate. If this reveals unwanted high-frequency components in the sampled signal, you will achieve better results by using a low-pass filter to remove them. The best kind of

filter for this purpose is the Anti-alias filter option in the **Bio Amp...** dialog. This is a special low-pass filter that is configured to automatically remove all signals that could alias; i.e., those whose frequency is greater or equal to half the sampling rate. A high sampling rate, however, will use more computer memory and may limit recording time so, once you have established the frequencies of interest in your incoming signal, with Anti-alias selected the sampling rate can be scaled down accordingly.

Inverting the Signal

The Invert checkbox provides a simple way to change the polarity of the recorded signal without having to swap the connections to the recording electrodes.

DC Restore

The DC Restore or Zero button is available in the Bio Amp dialog for the Dual, Quad and Octal Bio Amps. It provides a quick way to bring the recording trace back to zero. It is for use with very low high-pass filter settings, since the trace can take a long time to zero automatically at those settings. In later versions of LabChart the **DC Restore All** command from the Setup menu performs this operation on all Bio Amp channels.

Using the Bio Amp

Standard electrophysiology texts describe how to record various types of biological signal. ADInstruments also produces materials describing specific uses of Bio Amps, such as Animal Physiology and Human Physiology LabChart experiments, that can be downloaded from the ADInstruments website or obtained from your ADInstruments representative.

Some Suitable Uses

The Bio Amp can measure a wide variety of biological signal sources. Some of these measurements include:

ECG. Electrocardiogram (also referred to as EKG); a recording of surface potentials due to electrical currents associated with the heartbeat.

EEG. Electroencephalogram; a recording of the electrical activity of the brain. Scalp electrodes record potential waves (10–100 µV) representing the summed activity of cortical neurons.

EMG. Electromyography; a recording of the electrical activity of a muscle, using surface electrodes. The recorded activity may be a voluntary contraction, or evoked by motor nerve stimulation.

EOG. Electro-oculogram; a recording of the potential difference between the front and back of the eyeball, as projected on to the face. Only supported on Octal and Quad Bio Amps (not supported on Single and Dual Bio Amps)

ERG. Electroretinogram; a recording of the electrical signals produced in the retina by a light stimulus. Bilateral measurements require a Dual Bio Amp, or two Bio Amps.

Cortical Evoked Potentials. Averaged recordings of the electrical activity of the brain when subject to stimulation: visual evoked response, auditory evoked response, and somatosensory response. These should be done with signal averaging, using Scope view.

SNAP. Sensory nerve action potential; a recording of evoked responses in stimulated nerves. This is usually done with signal averaging, using Scope view.

Some Unsuitable Uses

The Bio Amp, Dual Bio Amp and Quad/Octal Bio Amp are not recommended for work requiring high-impedance electrodes or using a high bandwidth. Some of the tasks for which it is not really suitable include:

- Intracellular micropipette recordings. Recordings from a very fine, electrolyte-filled tube inserted into a nerve or muscle cell. These require an electrometer amplifier.
- Needle electromyography; the intramuscular recording of the electrical activity of a muscle, which requires low input capacitance and a driven guard.

For these a headstage is required. The bandwidth is limited to approximately 5 kHz.

Recording Technique

Several problems can arise when using the Bio Amp to record signals. These are basic problems of technique, and should be addressed before setting up. It is important to understand the types of problems that can occur, how they manifest, and what can be done to remove them or to minimize their effect. Potential problem areas include aliasing, frequency distortion, saturation, ground loops, electrode contact, motion artifacts, electromagnetic fields, and data display.

There is a good introduction to data acquisition provided in the documentation for LabChart. It is highly recommended reading for anyone recording biological signals using the front-end. Apart from the general areas covered in that material, two things particularly affect the kind of measurements made with the Bio Amp, and can cause ‘artifacts’ (spurious readings) in the recorded waveform: electrode contact and motion effects.

Electrode Contact. Occasionally during measurement of a biological signal, one of the lead wires connecting the source to the front-end may become disconnected, or an electrode contact may become poor. If this should happen, relatively high voltages (potentials) can be induced in the open wire, due to electric fields caused by the power line or other sources close to the front-end or to the subject. This induced potential results in a constant amplitude disturbance of the recorded waveform at the power line frequency, and loss of the desired signal. If the problem is a recurring one, one of the leads may be faulty. Check connections and replace faulty leads, if necessary.

Make sure that skin is cleaned and lightly abraded before attaching electrodes to it. Ensure that there is sufficient electrode cream to maintain a good contact: if it dries out, the contact will be poor, and the recorded signal may be degraded or lost.

Motion Effects. A common source of artifacts when recording biological signals is motion of the subject or equipment. For example, muscular activity generates its own

electrical signals, which may be recorded along with an ECG, depending on the location of the electrodes. If an electrode is not firmly attached, impedance (and hence the recorded signal) may vary as the contact area changes shape owing to movement. Movement of Bio Amp cables and leads, particularly bending or rubbing together (triboelectric effects) may also generate artifacts in a signal.

Subject respiration can also generate a signal: breathing can result in a slowly changing baseline corresponding to inspiration and expiration. Often applying a high-pass filter can help to remove slowly changing components from a recorded signal.

Bio Amp Operation

The Bio Amp and other ADInstruments front-ends have been designed to integrate fully into the PowerLab system. The Bio Amp is essentially an extension of the PowerLab's input amplifiers. The amplification and ranges offered in LabChart result from the combination of both pieces of hardware. The Dual Bio Amp is an enhanced double version of the single Bio Amp, with a common power supply and isolated ground. There are some modifications, but it is similar to the Bio Amp overall.

The Bio Amp provides:

- full electrical isolation from power-line (mains) circuitry to guarantee subject safety
- a low-noise, high-gain differential amplifier specifically designed for biological signal measurements
- software-controlled low-pass, high-pass, and notch filters to remove unwanted signal frequencies for particular uses
- audio output for use with EMG or EEG signals.

Right-leg Drive

The Quad and Octal Bio Amps include a feature known as Right-leg drive or a Driven Right Leg circuit. This circuit helps to reduce electrical interference from the mains picked up by the human body or via patient leads. In order to use this feature, the patient connections of channel 1 must be connected to the subject and the Right-Leg drive checkbox must be ticked. If the Right-leg drive checkbox is unticked, the green common terminal is connected to isolated ground inside the Bio Amp. The Right-leg drive circuit uses the green Common terminal and a patient lead must be connected to this terminal in order to use this feature.

The Bio Amp Cable Input

The Bio Amp cable, supplied with the Bio Amp and Dual Bio Amp, plugs into the six-pin input socket on the front panel of the Bio Amp. A notch in the plug ensures that polarity is correct. Only the supplied Bio Amp cable and lead wires should be used as other cables may not meet safety requirements.

Note: The pin arrangements for the Bio Amp and the Dual Bio Amp are different; the Bio Amp cables are not interchangeable. (The Bio Amp is supplied with a 3-lead Bio Amp cable, whereas the Dual Bio Amp is supplied with a 5-lead Bio Amp cable.)

Troubleshooting

This section describes the common problems that can occur when using the Bio Amp with your PowerLab recording unit. It covers how these problems are caused, and what you can do to alleviate them. If the solutions here do not work, refer to earlier chapters, the LabChart Help Center, and your PowerLab Owner's guide for possible remedies. If none of the solutions here or elsewhere are of help, then consult your ADInstruments representative.

Most of the problems that users encounter are connection problems, and can usually be fixed by checking connections and starting up the hardware and software again. Very rarely will there be an actual problem with the front-end or the PowerLab.

Problems and Solutions

The status indicator fails to light when the software is started, or the Bio Amp... dialog(s) do not appear where they should

The I^2C cable or one or more BNC-to-BNC cables from the Bio Amp to the PowerLab are not connected, have been connected incorrectly (to the wrong input, for instance), or are loose.

- Turn everything off. Check to see that all cables are firmly seated and screwed in. BNC cables from the Bio Amp must be connected to a positive input on the PowerLab. Make sure the input is the same channel from which you expect to use the front-end in the software. Start up again to see if this has fixed the problem.

You are using an early version of LabChart.

- Upgrade to the latest version of the software. Contact your ADInstruments representative for information.

The BNC or I^2C cable is faulty.

- Replace the cable and try again. Immediately label all cables proved faulty so that you don't use them again by accident.

The Bio Amp is faulty

- This is the least likely event. If the front-end will not work properly after the previous measures, then try using it on another PowerLab. If the same problems recur with a second PowerLab, the front-end may be faulty. Contact your ADInstruments representative to arrange for repairs.

On starting up the software, an alert indicates that there is a problem with the front-end or driver

The correct Bio Amp driver is not installed on your computer.

- Reinstall the software.

You are using an early version of LabChart.

- Upgrade to the latest version of the software. Contact your ADInstruments representative for information.

The BNC or I^2C cable is faulty.

- Replace the cable and try again. Immediately label all cables proved faulty so that you don't use them again by accident.

The Bio Amp is faulty.

- This is the least likely event. If the front-end will not work properly after the previous measures, then try using it on another PowerLab. If the same problems recur with a second PowerLab, the front-end may be faulty. Contact your ADInstruments representative to arrange for repairs.

The trace will not zero properly when adjusting high-pass filtering

The Bio Amp is receiving signals at a level that has saturated the input amplifier, resulting in a large offset. This is normally due to poor contact between the electrodes and the subject.

- Check the connections for proper contact and try again.

If you are using the Dual, Quad or Octal Bio Amps, with the 0.02 Hz high-pass filter, the trace can take a long time to zero by itself.

- Click the DC Restore button in the Bio Amp dialog to bring the trace back to zero quickly.

The signal appears to display a constant amplitude oscillation

Frequency interference from power lines can become superimposed on the biological signal being measured.

- You can use the internal notch filter in the Bio Amp to remove excessive line voltage frequency interference (use the checkbox in the Bio Amp dialog).

If you are using cables and leads that were not supplied with your Bio Amp, they may be unshielded or of low quality.

- Check to make sure that you are using high-quality shielded cables and high-quality leads. Only the supplied Bio Amp cable and leads should really be used.

The signal is noisy at lower ranges

This is probably the amplified noise from the electrodes, not a fault as such. There is, in addition, noise that cannot be avoided by any amplifier (called 'thermal' or 'Johnson' noise).

- Set the low-pass filter to remove the noise. (But be careful, since important components of the signal could also be attenuated.)

This could be due an electrically noisy environment, particularly if there is some equipment that produces a radio frequency that interacts with the Bio Amp modulator, giving a heterodyne effect.

- Turn off pieces of unnecessary equipment to try and isolate the cause, then either leave the equipment off, or, if possible, move the subject or equipment outside the area of any interfering field.
- At the lowest ranges you may have to shield, shorten, or even replace the Bio Amp leads, since they will tend to act as radio receptors.

The signal appears to be unusual, very weak, clipped, or distorted in some way

This may be a problem of technique: the sampling rate, range, or filter settings may be inappropriate for the signal you are recording.

- Make sure the settings are appropriate for the expected signal.

You may be using the wrong Bio Amp cable for the type of input. The single Bio Amp and Dual Bio Amp have different pin arrangements, so their Bio Amp cables are not interchangeable.

- Use the correct, supplied Bio Amp cable: a 3-lead cable for the single Bio Amp and a 5-lead cable for the Dual Bio Amp.

Specifications

Single Bio Amp

Input

Connection type:	Six-pin DIN/MS socket to fit 3-lead Bio Amp cable (Tronomed D-1340)
Input configuration:	1 isolated differential channel with isolated ground reference
Input impedance:	200 MΩ differential, 30 pF (no cable) or 500 pF (supplied Bio Amp cable and leads) to isolated ground
Isolation:	4000 V_{rms} (50 Hz for 1 minute)
Amplification ranges:	± 5 µV to ± 100 mV full scale in 14 steps (combined PowerLab and Bio Amp)
	± 100 mV
	± 50 mV
	± 20 mV
	± 10 mV
	± 5 mV
	± 2 mV
	± 1 mV
	± 500 µV
	± 200 µV
	± 100 µV
	± 50 µV
	± 20 µV
	± 10 µV
	± 5 µV
Gain accuracy:	± 1.5% all ranges
Non-linearity:	< 0.2% within range
Noise at various bandwidths:	1 Hz to 5 kHz: < 1.3 μV_{rms} (< 8 µV p-p)
	0.3 Hz to 1 kHz: < 0.6 μV_{rms}
	0.1 Hz to 100 Hz: < 0.35 μV_{rms} (@ 200 samples/second)
IMRR (isolation mode):	> 130 dB (to true earth, 50–60 Hz)
CMRR (common mode):	> 85 dB typical (1–60 Hz)

Input leakage current:	< 3 μA_{rms} @ 240V, 50 Hz
	< 2 μA_{rms} @ 120V, 60 Hz
DC blocking:	± 1 V
Baseline restoration:	Automatic

Filtering

Low-pass filtering:	Fourth-order Bessel filter, ± 3% accuracy. Frequencies software-selectable. Standard: 50, 100, 200, 500, 1000, & 5000 Hz (@ –3 dB);
	EEG mode: 3, 10, 30, 60, & 120 Hz
High-pass filtering:	First-order filter, ± 0.25% accuracy. Frequencies software-selectable.
	Standard: 0.1, 0.3, 1, 3, & 10 Hz (@ –3 dB);
	EEG mode: 0.03, 0.1, 0.3 & 1 seconds
Notch filter:	Second-order filter, –32 dB attenuation;
	50 or 60 Hz frequency (automatic sensing)

Output

Signal:	± 2.0 V standard
Audio:	Stereo jack with mono output; ± 200 mV full scale, current limited to ± 5 mA. Suitable for headphones or unpowered speakers.

WARNING: In order to comply with IEC60601-1, MLA1250 stereo headphones must be used.

Control Port

I^2C port:	Provides control and power. Interface communications rate of ~50 kbits/s.

Physical Configuration

Dimensions (h × w × d):	55 mm × 120 mm × 260 mm (2.2" × 4.7" × 10.2")
Weight:	1.3 kg (2 lb 12 oz)
Power requirements:	~2 W
Operating conditions:	5–35 °C, 0–90% humidity (non-condensing)

Safety

Safety:	Approved to IEC 60601-1 Standard (BF rating)
EMC:	Approved to EN61326-1:2006 Standard
Other approvals:	CSA/US
Equipment:	Class I
Operation:	Continuous

Unsuitable uses:	Do not use in the presence of flammable anaesthetic - air mixtures. Avoid operating near high voltage, RF or strong magnetic fields that may cause interference.
Method of disposal:	Forward to recycling centre or return to manufacturer.

Dual Bio Amp

Input

Connection type:	Six-pin DIN/MS socket to fit 5-lead Bio Amp cable (Tronomed D-1540)	
Configuration:	2 isolated differential channels with common isolated ground reference	
Input impedance:	200 MΩ differential, 30 pF (no cable) or 500 pF (supplied Bio Amp cable and leads) to isolated ground	
Isolation:	4000 V_{rms} (50 Hz for 1 minute)	
Input ranges:	± 5 µV to ± 100 mV full scale in 14 steps (combined PowerLab and Bio Amp)	
	± 100 mV	
	± 50 mV	
	± 20 mV	
	± 10 mV	
	± 5 mV	
	± 2 mV	
	± 1 mV	
	± 500 µV	
	± 200 µV	
	± 100 µV	
	± 50 µV	
	± 20 µV	
	± 10 µV	
	± 5 µV	
Accuracy:	± 1.5% all ranges	
Non-linearity:	< 0.2% within range	
Noise at various bandwidths:	1 Hz to 5 kHz:	< 1.3 μV_{rms} (< 8 µV p-p)
	0.3 Hz to 1 kHz:	< 0.6 μV_{rms}
	0.1 Hz to 100 Hz:	< 0.35 μV_{rms} (@ 200 samples/second)

IMRR (isolation mode):	> 135 dB (to true earth, 50–60 Hz)
CMRR (common mode):	> 85 dB typical (1–60 Hz)
Input leakage current:	< 3 μA_{rms} @ 240 V, 50 Hz
	< 2 μA_{rms} @ 120 V, 60 Hz
DC blocking:	± 1 V
Baseline restoration:	Automatic or manual

Filtering

Low-pass filtering:	Fourth-order Bessel filter, ± 3% accuracy. Frequencies software-selectable. Standard: 50, 100, 200, 500, 1000, 2000, & 5000 Hz (@ –3 dB);
	EEG mode: 3, 10, 30, 60, & 120 Hz
High-pass filtering:	First-order filter, ± 0.25% accuracy. Frequencies software-selectable.
	Standard: 0.02, 0.1, 0.3, 1, 3, & 10 Hz (@ –3 dB);
	EEG mode: 0.03, 0.1, 0.3 & 1 seconds
Notch filter:	Second-order filter, –32 dB attenuation;
	50 or 60 Hz frequency (automatic sensing)

Output

Signal:	± 2.0 V standard
Audio output:	Stereo output supplying signals from both data channels; ± 200 mV full scale, current limited to ± 5 mA. Suitable for headphones or unpowered speakers.

WARNING: In order to comply with IEC60601-1, MLA1250 stereo headphones must be used.

Control Port

I^2C port:	Provides control and power. Interface communications rate of ~50 kbits/s.

Physical Configuration

Dimensions (h × w × d):	55 mm × 240 mm × 260 mm
	(2.2" × 9.4" × 10.2")
Weight:	2.0 kg (4 lb 6.4oz)
Power requirements:	~3 W
Operating conditions:	5–35 °C, 0–90% humidity (non-condensing)
Transport/storage conditions:	0–40 °C, 0–95% relative humidity

Safety

Safety:	Approved to IEC 60601-1 Standard (BF rating)
EMC:	Approved to EN61326-1:2006 Standard
Other Approvals:	CSA/US
Operation:	Continuous
Unsuitable uses:	Do not use in the presence of flammable anaesthetic - air mixtures. Avoid operating near high voltage, RF or strong magnetic fields that may cause interference. Equipment is not suitable for use in the presence of a flammable anaesthetic mixture with air or oxygen or nitrous oxide.
Method of Disposal:	Forward to recycling centre or return to manufacturer.

Quad/Octal Bio Amp

Input

Connection type:	9 × 1.5 mm (Quad) or 17 × 1.5 mm (Octal) pin shrouded male socket to suit single pin 1.5 mm
Configuration:	4 (Quad) or 8 (Octal) isolated differential channels with common isolated ground reference or right leg drive
Input impedance:	>1 GΩ differential, <100 pF (no cable) to isolated ground
Isolation:	4000 V_{rms} (50 Hz for 1 minute)
Input ranges:	± 100 µV to ± 100 mV full scale in 10 steps (combined PowerLab and Bio Amp)
	± 100 mV
	± 50 mV
	± 20 mV
	± 10 mV
	± 5 mV
	± 2 mV
	± 1 mV
	± 500 µV
	± 200 µV
	± 100 µV
Gain accuracy:	± 1.5% all ranges
Non-linearity:	< 0.2% within range
Noise at various bandwidths:	1 Hz to 10 kHz: < 1.3 μV_{rms} (< 8 µV p-p)

	0.3 Hz to 1 kHz: < 0.7 μV_{rms}
	0.1 Hz to 100 Hz: < 0.35 μV_{rms}
IMRR (isolation mode):	> 160 dB (to non-isolated earth, 50 Hz)
CMRR (common mode):	>75 dB typical (150K electrode impedance, 5K imbalance @50Hz and 60Hz)
	>100dB typical (Balanced electrode impedance @50Hz and 60Hz)
Input leakage current:	< 4 μA_{rms} @ 240 V, 50 Hz
DC tolerance:	± 370 mV
Baseline restoration:	Automatic or manual

Filtering

Low-pass filtering:	Frequencies software-selectable.
	50, 100, 200, 500, 1000, 2000, 5000, 10000 Hz, Off
High-pass filtering:	Frequencies software-selectable.
	D.C, 0.0003, 0.001, 0.003, 0.01, 0.03, 0.1, 0.3, 1, 3, 10, 30, 100, 200, 300 Hz
Adaptive main filter:	50 or 60 Hz frequency (Refer to Powerlab owner's guide for further information)

Output

Signal:	± 5.0 V maximum
Audio output:	3.5mm stereo output socket suitable for direct headphone or powered speaker connection. Output selectable from software.

Control Port

I^2C port:	Provides control and power. Interface communications rate of ~50 kbits/s.

Physical Configuration

Dimensions (h × w × d):	70mm x 240mm x 260mm
	(2.7" x 9.45" x 10.2")
Weight:	2.5 kg (5.5 lb)
Power requirements:	~10 W
Operating conditions:	5–35 °C, 0–90% humidity (non-condensing)
Storage conditions:	0–40 °C, 0–95% humidity (non-condensing)

NOTE: PowerLabs provide power to the Bio Amp and no other power source is required.

NOTE: Applied parts of the Quad/Octal Bio Amps are the 1.5 mm input sockets and the patient leads (e.g MLA0310, MLA0311)

Regulatory Information

Safety:	Complies with IEC 60601-1:2012 (tested by TUV Singapore)
EMC:	Complies with IEC 60601-1-2:2014 (tested by EMC Technologies, Sydney, Australia)
Equipment:	Use only with an ADInstruments 35 series PowerLab. The PowerLab must be connected to safety earth via the power supply cable to ensure electrical safety.
Operation:	Continuous
Body protection rating (Applied parts only):	(BF)
Unsuitable uses:	Do not use in the presence of flammable anaesthetic - air mixtures. Avoid operating near high voltage, RF or strong magnetic fields that may cause interference.
Method of Disposal:	Forward to recycling centre or return to manufacturer.

This equipment is not intended to be modified or serviced by the user. No user serviceable parts inside. Refer servicing to authorised ADInstruments service centre. ADInstruments reserves the right to alter these specifications at any time.

Electromagnetic Compatibility

The Bio Amps (the devices) have been tested to comply with the requirements of EN 61326-1:2006 and IEC 60601-1-2. (The relevant basic EMC standards are IEC 61000-4-2, IEC 61000-4-3, IEC 61000-4-6, IEC 61000-4-8, IEC 61000-4-11 and CISPR 11).

Emissions

- The devices use RF energy for its internal function only. RF emissions are very low and are not likely to cause any interference in nearby electronic equipment.
- The devices are suitable for use in all establishments, including domestic establishments and those directly connected to the public low-voltage power supply network that supplies buildings used for domestic purposes.

Immunity

- Mains power quality should be that of a typical commercial or hospital environment. If the user of the device requires continued operation during power mains interruptions, it is recommended that the device be powered from an uninterruptible power supply or a battery.
- Power frequency magnetic fields should be at levels characteristic of a typical location in a typical commercial or hospital environment.
- Floors should be wood, concrete or ceramic tile. If floors are covered with synthetic material, the relative humidity should be at least 30%.

Separation Distances

- The devices are intended for use in an electromagnetic environment in which radiated RF disturbances are controlled.
- Portable and mobile RF communications equipment should be used no closer to any part of the device, including cables, than the recommended separation distance in the table below.
- Field strengths from fixed RF transmitters, as determined by an electromagnetic site survey, should be less than the compliance level in each frequency range.

Rated maximum output power of transmitter, P	Separation distance	
	150 kHz to 800 MHz	800 MHz to 2.7 GHz
	$d = 1.17\sqrt{P}$	$d = 2.33\sqrt{P}$
0.01 W	0.1 m	0.2 m
0.1 W	0.4 m	0.7 m
1 W	1.2 m	2.3 m
10 W	3.7 m	7.4 m
100 W	11.7 m	23.4 m

Chapter 8

Neuro Amp EX

The FE185 Neuro Amp EX is one of a family of devices called front-ends, designed to extend the capabilities of the PowerLab system. It differs from other front-ends by including an additional piece of hardware, the headstage. The Neuro Amp EX allows the PowerLab system to record extracellular action potentials from single cells or groups of cells.

The Neuro Amp EX provides:

- full electrical isolation from power-line (mains) circuitry to guarantee subject safety.
- a low-noise, high-gain differential amplifier specifically designed for neurophysiological extracellular signal measurements.
- software-controlled low-pass, high-pass, notch and mains filters to remove unwanted signal frequencies for particular uses.
- audio output to listen to neurological signals.

The Neuro Amp EX is fully isolated for human use, in addition to being suitable for making extracellular recordings from experimental animals.

The Neuro Amp

The Neuro Amp EX [FE185] is designed to allow the PowerLab system to perform isolated measurements of single-unit or multi-unit extracellular action potentials from single neurons or axons, from human or animal subjects. It consists of an electrically isolated differential input AC amplifier with an isolated ground connection.

It is possible to 'daisy-chain' multiple Neuro Amp EXs to record from separate subjects, using separate grounds. However, it is not recommended to use more than one Neuro Amp EX to record from a single subject or to use a Neuro Amp EX with an ADInstruments' Bio Amp to record from a single subject (this is discussed in more detail in the next section).

The Front Panel

The front panel of a Neuro Amp EX has an input socket and a status indicator light.

Figure 8–1
The front panel of the Neuro Amp EX

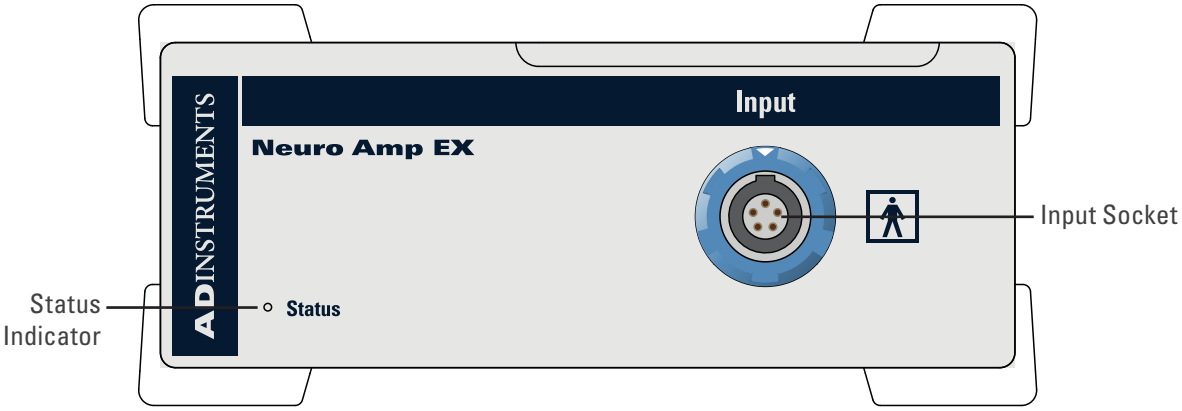

The Input Socket

The headstage output cable is coupled to the Neuro Amp EX front-end using a five-pin input socket on the front panel. The pin arrangement ensures that the polarity is correct. The input socket is physically and electrically isolated from the low-voltage mains-supply circuitry of the PowerLab and the input connections are isolated internally by isolation circuitry. The socket provides 7.5 V supply lines to the headstage, a protected earth and differential input lines.

The Status Indicator

The status indicator light of a Neuro Amp EX is located at the bottom left of the front panel.

When an ADInstruments application such as LabChart starts, the status indicator should flash briefly and then remain green, indicating that the program has found the front-end, checked and selected it, and is ready to use it. If the status indicator does not turn on and stay on when the application starts, it is most likely that the front-end is not connected properly.

The Back Panel

The back panel of the Neuro Amp EX provides all the sockets required to connect the front-end to the PowerLab and to other front-ends.

Figure 8–2 The back panel of the Neuro Amp EX

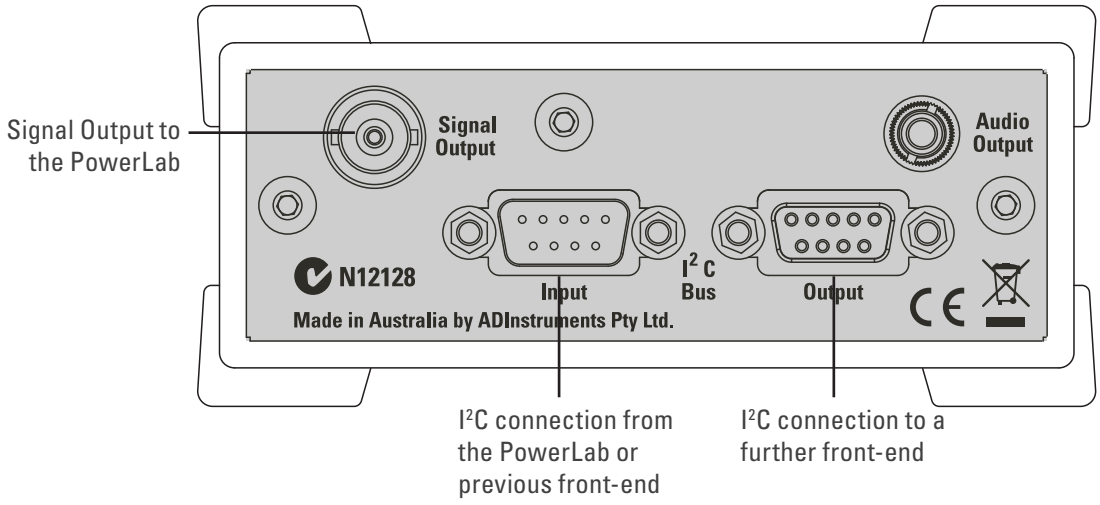

I²C Input and Output Sockets

Two nine-pin sockets are used to communicate with the PowerLab (they are marked 'I²C Bus': a 'bus' is simply information-transmission circuitry such as cables and connectors). These sockets allow multiple front-ends to be used independently with one PowerLab.

Power and control signals to the front-ends come from the PowerLab. Many front-ends can be connected to the system, in series, output to input, providing there is the same number of channel inputs available on the PowerLab (this is discussed in more detail in the next chapter).

Analog Out Socket

The BNC socket labeled Analog Out on the back panel provides the signal output and a connection is made to an analog input socket on the front of the PowerLab with a BNC-to-BNC cable (supplied).

If you are connecting to an earlier model PowerLab with differential inputs, only connect the analog output to the positive analog input of the PowerLab. ADInstruments applications do not find a front-end on start up if the negative input is used.

Audio Out Socket

The Neuro Amp EX has an audio monitor output on the back panel that can be used with a wide range of headphones or externally powered speakers. The 3.5 mm socket provides mono sound that may be of use when monitoring nerve firings, to control the placement of electrodes for instance.

Connecting to the PowerLab

To connect a front-end to the PowerLab, first ensure that the PowerLab is turned off. Failure to do this may damage the PowerLab, the front-end, or both.

Connect the signal output on the rear panel of the Neuro Amp EX to an analog input on the front panel of the PowerLab using a BNC cable. If the PowerLab has differential (rather than single-ended) inputs, the BNC cable must connect to a positive analog input of the PowerLab. ADInstruments applications will not find the front-end on start-up if a negative input is used.

Single Front-end

Connect the I²C output of the PowerLab to the I²C input of the front-end using the I²C cable provided. Figure 9–3 shows how to connect up a single front-end to your recording unit.

Check that the plugs for the I²C bus are screwed in firmly. Check the BNC cable for firm connections as well. Loose connectors can cause erratic front-end behavior, or may cause the front-end to fail to work at all. The BNC cable can be tucked under the front-end to keep it out of the way if desired.

Figure 8–3 Connecting the Neuro Amp EX to the PowerLab

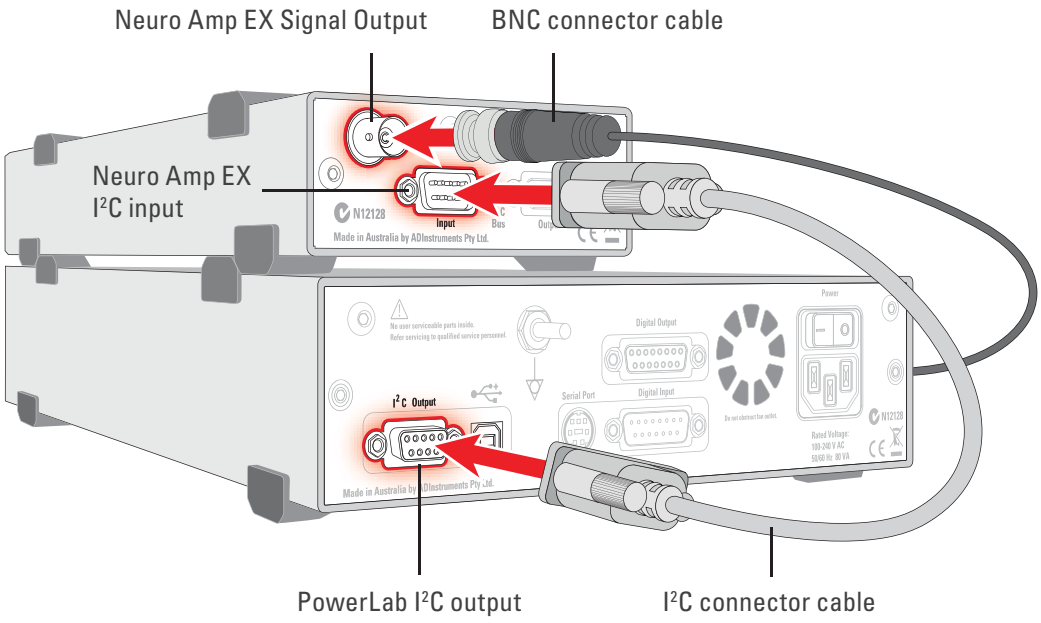

Multiple Front-ends

Multiple separate front-ends can be connected to a PowerLab. The number of normal front-ends that can be connected depends on the number of input channels on the PowerLab, since each signal output from a front-end is connected to one of the analog input channels on the PowerLab.

The initial front-end should be connected with the I²C cable, as shown in Figure 9–3. The remainder are daisy-chained via I²C cables, connecting the I²C output of the last connected front-end to the I²C input of the front-end to be added, as shown in Figure 9–4. Note that signal degradation may occur if multiple front-ends share a common Ground/reference, such as when they are connected to a single subject.

Figure 8–4
Connecting two front-ends to the PowerLab: a connection is made from the I²C output on the first front-end to the I²C input on the second front-end

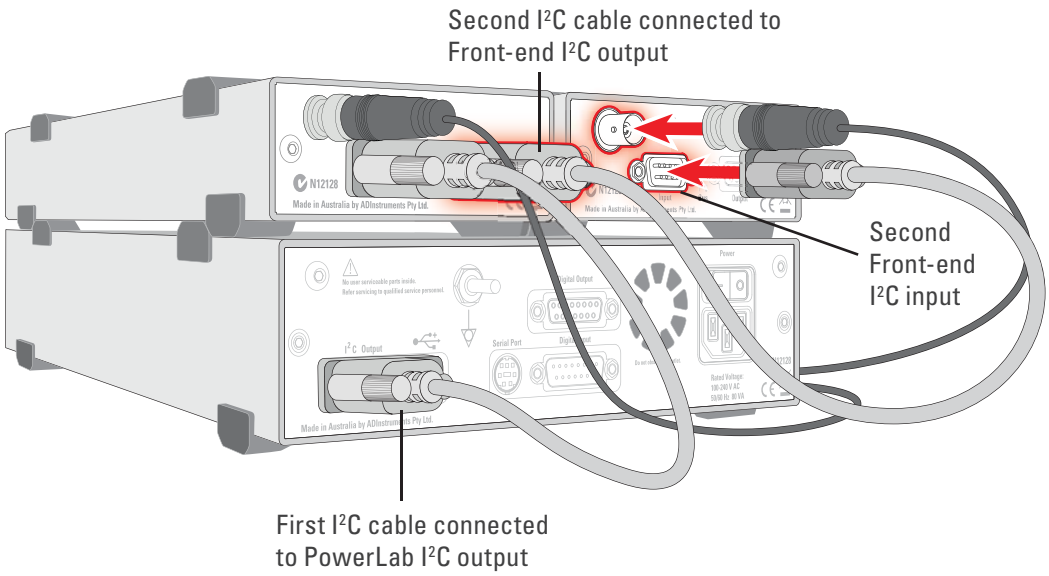

Using More Than One Neuro Amp EX

Although you can record with more than one Neuro Amp EX front-end using a common Ground/reference, such as when recording from a single subject, it is not recommended. If using two or more Neuro Amp EX front-ends, some interaction can take place between them, causing up to 10 µV of induced low-frequency signal, due to slight differences in frequency between the isolated power supplies. This should not affect most biopotential measurements, especially if using signal averaging. Narrowing the signal bandpass may also reduce the effect.

Software Requirements

The Neuro Amp EX requires the following versions of ADInstruments software applications:

- LabChart version 6, or later, for Windows or Macintosh
- Scope for Windows version 3.8.5, or later
- Scope for Macintosh version 4.1.1, or later

Note: the Neuro Amp EX may not operate correctly with earlier versions of these applications. If you have queries regarding hardware and software requirements of the Bridge Amps, please contact your local ADInstruments representative.

Using LabChart

When a Neuro Amp EX is properly connected to the PowerLab, the **Input Amplifier...** menu command is replaced with **Neuro Amp EX...** for the input to which the Neuro Amp EX is connected. If the application fails to find a front-end connected, the normal text remains. If the expected text is not displayed, quit the application, turn the PowerLab off and check the BNC and I^2C connections. Then restart the PowerLab and relaunch the application.

The documentation for LabChart does not cover front-end-specific features. These features are described in detail here for LabChart. Generally, dialogs for these applications are similar. The Neuro Amp EX dialog for LabChart for Macintosh and LabChart for Windows are very similar and are described here together.

Neuro Amp EX dialog

The Neuro Amp EX dialog (Figure 9–5 and Figure 9–6) allows software control of the combined input amplifiers and filters in the PowerLab and Neuro Amp EX. The signal present at a channel's input is displayed in the preview area so that you can see the effects of changes in settings. After changing settings in the dialog, click the **OK** button to apply them.

The Neuro Amp EX dialog appears when you choose **Neuro Amp EX...** from a Channel Function pop-up menu. To set up many channels quickly, open the **Setup > Channel Settings...** dialog. Here you can view all the channels that are turned on, and you can turn off any unnecessary channels. Clicking on **Neuro Amp EX...** in the Input Settings column of the Channel Settings dialog will also open the Neuro Amp EX dialog.

Figure 8–5 The Neuro Amp EX dialog for Windows

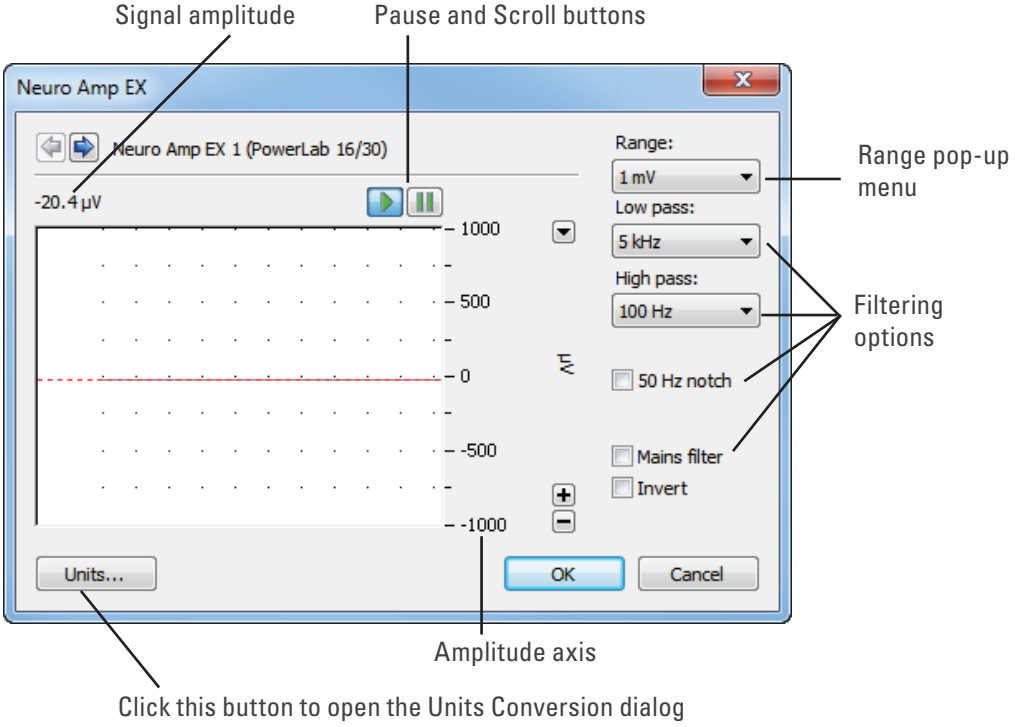

Figure 8–6
The Neuro Amp EX dialog for Macintosh

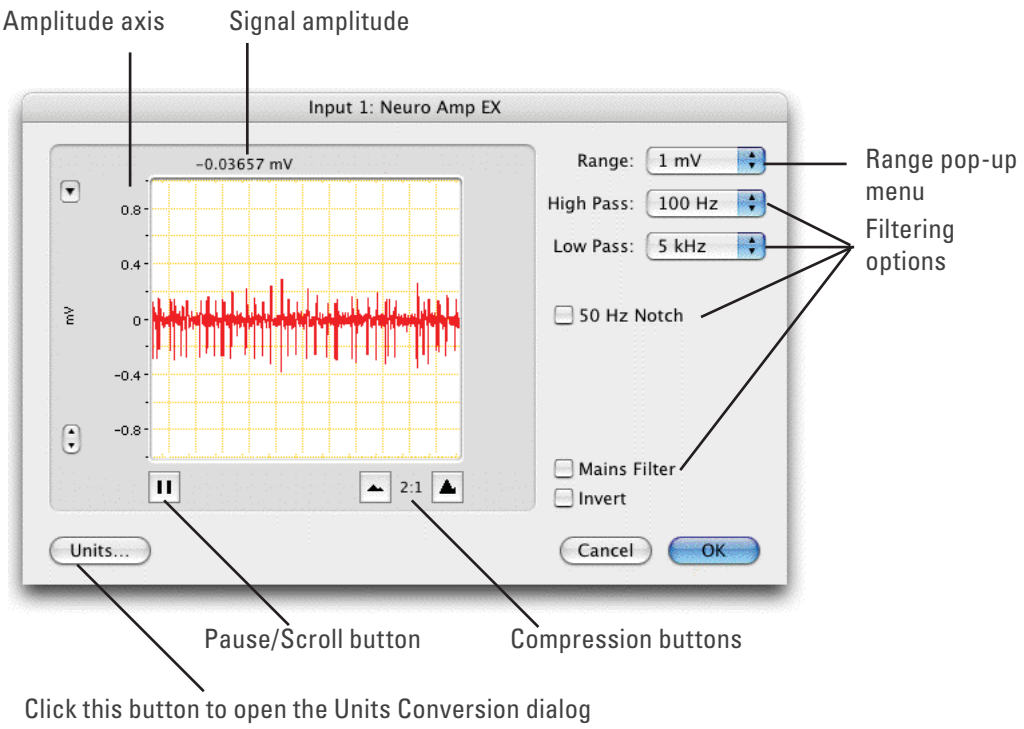

Signal Display

The input signal is displayed so you can see the effect of changing the settings – no data is recorded while setting things up. The average signal value is shown above the display area.

You can stop the signal scrolling by clicking the Pause button at the bottom left (Macintosh) or top right (Windows) of the data display area. This changes to the Scroll button on the Macintosh. Click the Scroll button to start scrolling again.

On the Macintosh, Show Range Axis in the Scale pop-up menu displays the range axis at the right of the display area, and the Compression buttons adjust the horizontal axis of the data display area.

You can shift and stretch the vertical Amplitude axis by clicking and dragging it in various ways to make the best use of the available display area. It functions the same as the Amplitude axis of the Chart Window; the controls are identical and any change is also applied to the Chart Window.

Setting the Range

The Range pop-up menu lets you select the input range or sensitivity of the channel – the combined range of the PowerLab and the Neuro Amp EX. Changing the range in the Neuro Amp EX dialog is equivalent to changing it in the LabChart window. The default setting is 1 mV and the ranges go down to 20 µV in 6 steps.

Filtering

The Neuro Amp EX has low-pass, high-pass, notch and mains filter circuitry that can be adjusted to suit the application. The notch filter removes 50 or 60 Hz interference and the mains filter removes mains frequency related interference. In general, it is better to prevent interference at the source than to filter it. The high-pass and low-pass filters provide bandwidth limiting of low-frequency and high-frequency signals, respectively. Note that the settings for one filter type may restrict the possible settings for the other.

High-Pass Filtering. The High Pass pop-up menu gives the choice of 100 Hz, 300 Hz and 500 Hz high-pass filters. The high-pass filter removes frequencies below the selected cut-off frequency and allows high frequencies in the signal to pass. Note: this amplifier is not suitable for DC recording.

Low-Pass Filtering. The Low Pass pop-up menu gives the choice of 1 kHz, 2 kHz and 5 kHz low-pass filters. The low-pass filter removes high-frequency components above the selected cut-off frequency and allows lower frequencies in the signal to pass. These filters are useful for removing high-frequency signals, such as noise, and to prevent aliasing in the recorded signal (see page 24).

Notch Filter. Select or deselect the Notch checkbox to turn the notch filter on and off. The notch filter is automatically set to either 50 or 60 Hz, depending on the power line voltage frequency being used by the PowerLab (the mains frequency). It provides approximately 32 dB of attenuation, thus reducing the effect of the 50 or 60 Hz signals that can be easily picked up by long leads.

Mains Filter. Select or deselect the Mains filter checkbox to turn the mains filter on and off. The mains filter allows you to remove interference related to the mains frequency (both fundamental and harmonic frequencies). This is an adaptive filter. It adjusts to filter the interference by tracking the input signal for a second, creating a template of the interfering frequencies and then subtracting this template from the input signal. Because of this, in general, using the mains filter is better than using the notch filter. However, the mains filter does have some limitations, such as not being useful for very short recordings of less than one second. More details on the mains filter can be found in the **LabChart Help Center**.

Inverting the Signal

The Invert checkbox provides a simple way to change the polarity of the recorded signal without having to swap the connections to the recording electrodes.

Units

Selecting Units Conversion from the channel drop down displays the Units Conversion dialog, which allows you to set the units for a channel and, using waveform measurements, calibrate the channel. The waveform in the data display area of the Neuro Amp EX dialog is transferred to the data display area of the Units Conversion dialog. (Use the Pause button to capture a specific signal.) The units conversion only applies to subsequently recorded signals; hence it is more limited than choosing **Units**

Conversion... from the Channel function pop-up menu as it does not allow conversion of previously recorded blocks of data.

Types of Measurement

The low noise and high gain of the Neuro Amp EX makes it suitable for all recordings that require a high bandpass (300 Hz – 5 kHz) and a high signal-to-noise ratio. Such recordings may include extracellular recordings from single cells or groups of cells, or from nerve fibres (split-nerve preparation or human microneurography). The headstage provides a gain of 100x and the cable shielding is directly connected to the casing, limiting the need for additional shielding at the input terminals.

Note: The Neuro Amp EX is not suitable for intracellular recording with glass microelectrodes.

The Neuro Amp EX Headstage

The headstage can be mounted in a micromanipulator for animal use or taped directly to the skin of a human subject. The casing of the headstage is connected to the shielding of the cable, thereby providing shielding up to the input terminals. Three female gold plated miniature sockets provide inputs on the headstage. The positive and negative terminals are adjacent, while the ground terminal is further away. The positive terminal is distinguished by a slightly recessed surround.

Figure 8–7
Input sockets for the Neuro Amp EX headstage

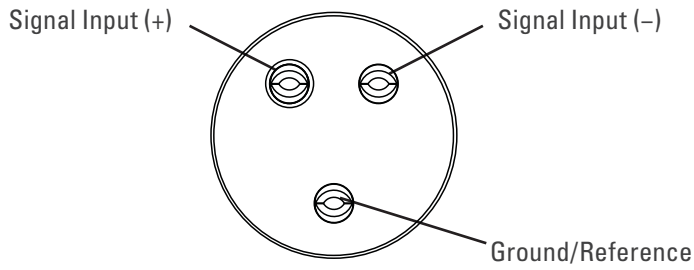

Connections are made to the Neuro Amp EX front-end using the supplied Neuro Amp EX headstage and connectors (microelectrodes are not supplied). The headstage cable plugs into the five-pin input socket on the front panel: the pin arrangement ensures that polarity is correct. Only use the supplied Neuro Amp EX headstage as others may not meet safety requirements.

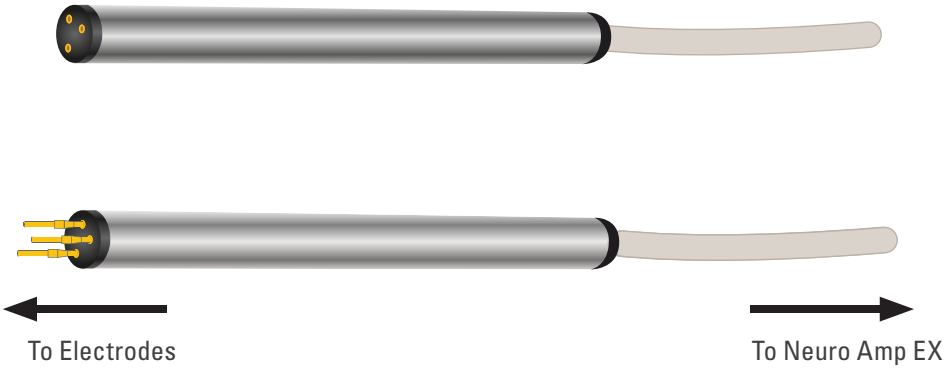

Figure 8–8 Headstage for the Neuro Amp EX, as supplied (top), and with male connectors attached (below)

Six male gold plated miniature connectors or pins are supplied with the headstage. These can be crimped or soldered to standard metal microelectrodes, such as tungsten, stainless steel or platinum, to allow you to construct electrodes to suit your requirements.

Recording Technique

When conducting research using the Neuro Amp EX, it is important to ensure that you use correct preparation and recording techniques. It is important to understand the types of problems that can occur, how they manifest, and what can be done to remove them or to minimize their effect. Potential problems may arise due to aliasing, frequency distortion, saturation, ground loops, electromagnetic fields, electrode contact and motion artifacts. Many of these are discussed in "Preventing Problems" on page 14. See the section below for discussion of preventing artifacts due to poor electrode contact and subject movement.

Setting up to Record From a Subject

This section provides a step-by-step guide to making a recording from a subject. After making the subject comfortable, a suitably qualified operator can use the following steps to attach the headstage. The operator should follow their institute's guidelines for making neurological recordings and use precautions to minimize the risk of infection:

1. Attach the headstage to the Neuro Amp EX.
2. Securely attach the headstage to the subject by taping or bandaging it to the limb or trunk.
3. Insert all the pins into the headstage. Attach the Ground/reference electrode first, using Figure 9–7 as a guide.
4. Connect the active microelectrode (+) and the reference electrode (-) to the positive and negative inputs of the headstage, respectively.
5. The Audio Output from the Neuro Amp EX can be connected to external speakers, if required.
6. To help locate the nerve site, nerve stimulating techniques compatible with your institute's guidelines may be used. Stimulation may be made using the ADInstruments Stimulus Isolator, or another Isolated Stimulator.

7. Changes in signal output in response to nerve stimulation can be observed using the Neuro Amp EX dialog or by recording data using Scope View in LabChart.
8. If no longer required, move stimulation leads away from the headstage before recording. Leaving them attached or close to the headstage will introduce noise.

For microneurography studies, the subject is normally passive during the procedure. The headstage *must* be connected to the Neuro Amp EX before and during the procedure. During the procedure, an operator:

- securely attaches the headstage to the subject using tape or a bandage (Figure 9–9);
- chooses a zero/reference point on the subject by attaching the Ground/Reference electrode to the subject (Figure 9–10);
- and, finally, connects the active and reference microelectrodes to the subject (Figure 9–11).

The headstage must be securely attached (Figure 9–9) to the limb of the subject under investigation. This ensures that the headstage is in contact with the subject and helps to minimize artifacts from movement.

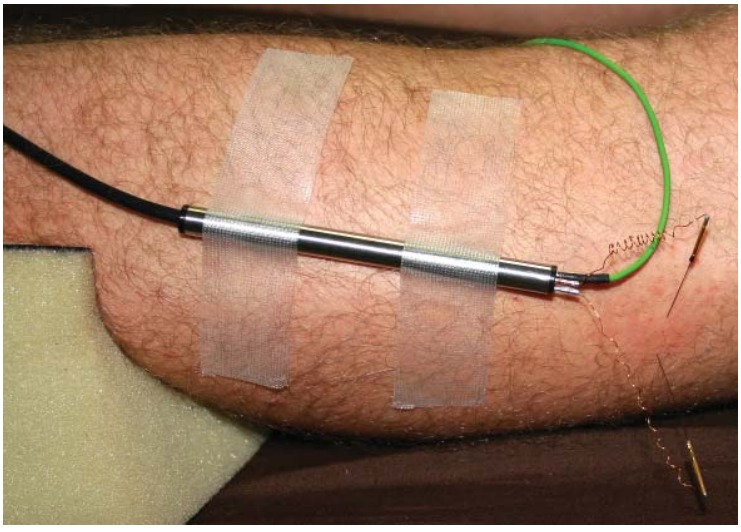

Figure 8–9 The headstage should be securely attached to the subject.

The Ground/Reference lead can be attached to a surface electrode using a press stud or snap fitting (Figure 9–10).

Figure 8–10 The Ground/Reference lead wire attached with a press stud

Microelectrode needles should be positioned using examination gloves to minimize the risk of infection. The active microelectrode is inserted into the subject's skin overlying the nerve, while the reference electrode is inserted under adjacent skin. Under no circumstances should the headstage be disconnected from the Neuro Amp EX while the electrodes are still attached to the subject. Not having the headstage attached to the Neuro Amp EX before and during the procedure may result in small static electric shocks being delivered to the subject through the microelectrodes.

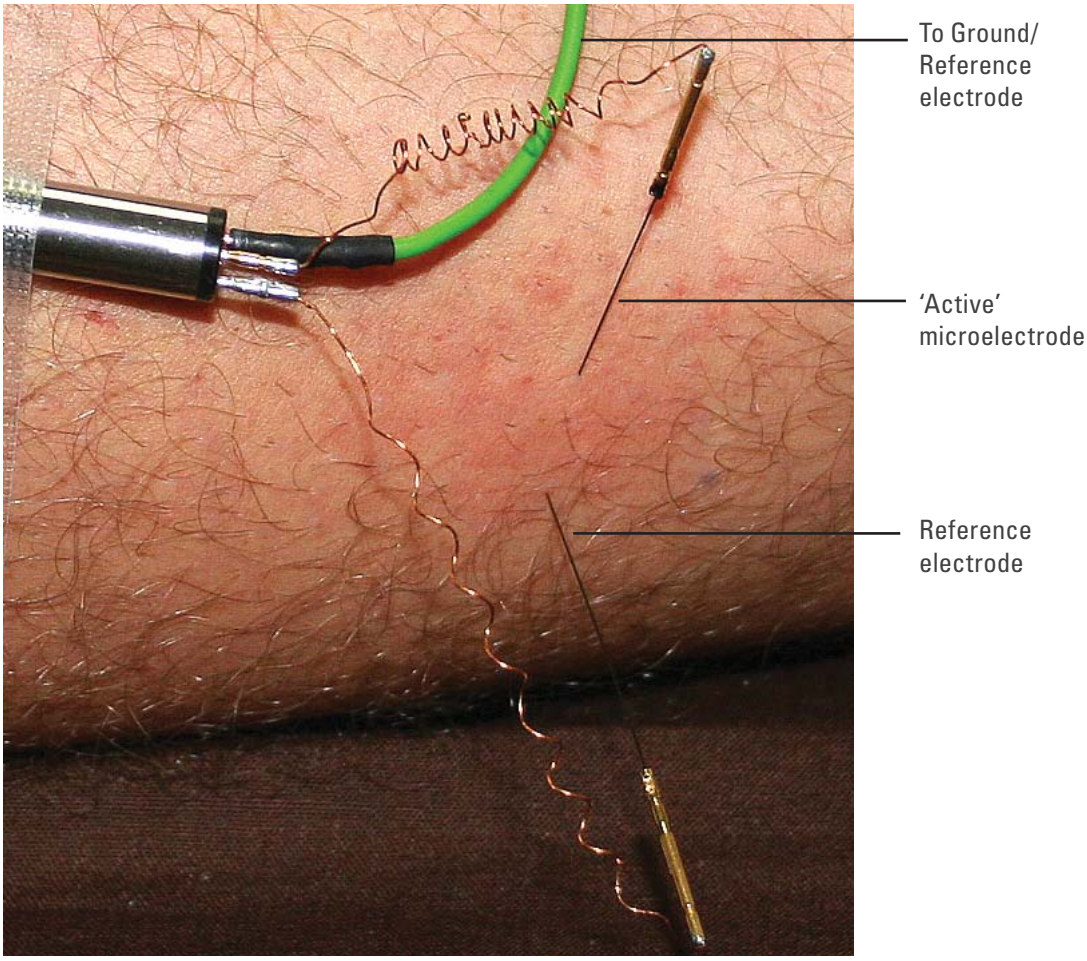

Figure 8–11 The active microelectrode is inserted over the common peroneal nerve at the fibular head. The reference electrode is inserted under the skin. The ground (Ag/AgCl) electrode is attached to the surface of the skin with the green lead.

Motion Effects

A common source of artifacts when recording neurological signals is motion of the subject or equipment. For example, muscular activity generates its own electrical signals, which may interfere with the neuronal signal, depending on the location of the electrodes.

If the subject is going to move during recording, then special care needs to be taken when positioning electrodes and securing leads.

Electrode Contact

Occasionally during measurement of a neurological signal, one of the lead wires connecting the source to the front-end may become disconnected, or electrode contact may become poor. If this should happen, relatively high voltages (potentials) can be induced in the open wire, due to electric fields caused by the power line or other sources close to the front-end or to the subject. These induced potentials result in a constant amplitude disturbance in the recorded signal at the mains frequency, causing masking or loss of the desired signal. If the problem is a recurring one, one of the leads may be faulty. Check connections and replace faulty leads, if necessary.

Technical Aspects

The Neuro Amp EX and other ADInstruments front-ends have been designed to integrate fully into the PowerLab system. The Neuro Amp EX is essentially an extension of the PowerLab's input amplifiers. The amplification and ranges offered in LabChart result from the combination of both pieces of hardware.

The PowerLab provides control and low-voltage power to front-ends through a special expansion connector called the I^2C bus. Front-ends are also connected to the analog inputs of the PowerLab via a BNC cable, through which they send the amplified and filtered signals. The overall operation of the Neuro Amp EX can be better understood by referring to Figure 9–13 on page 71.

The headstage is a differential in/differential out amplifier with a fixed gain of ×100 and a 10 Hz high-pass filter. The amplifier drives a differential signal into the Neuro Amp EX. Power is supplied through the connector. A reference pin is a current-limited isolated ground return to protect against excessive auxiliary current. The overall operation of the Neuro Amp EX headstage can be better understood by referring to Figure 9–12.

The input amplifier of the Neuro Amp EX starts with an electrically isolated differential amplifier. The output of this is fed into a low-noise demodulator and then to a programmable gain stage, before being fed across an isolation transformer to the non-isolated circuitry.

Figure 8–12
Block diagram of the headstage amplifier

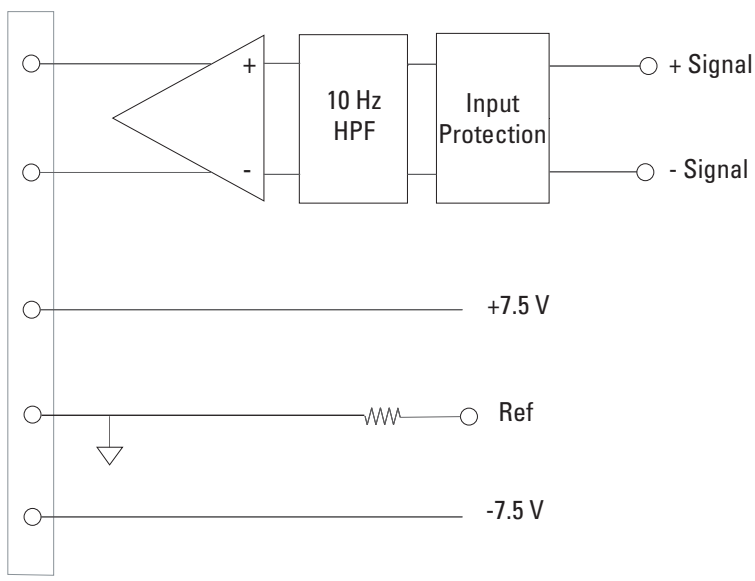

Control of the isolated gain is provided via a high-isolation-voltage optocoupler. Isolated power comes from a second isolation transformer driven by a power oscillator circuit running at about 38 kHz.

The signal from the isolated input amplifier is synchronously demodulated and then fed to a programmable, switched-capacitor, high-pass filter. Any switching clock noise is filtered by the low-pass filter following this stage.

Figure 8–13
Block diagram of the Neuro Amp EX

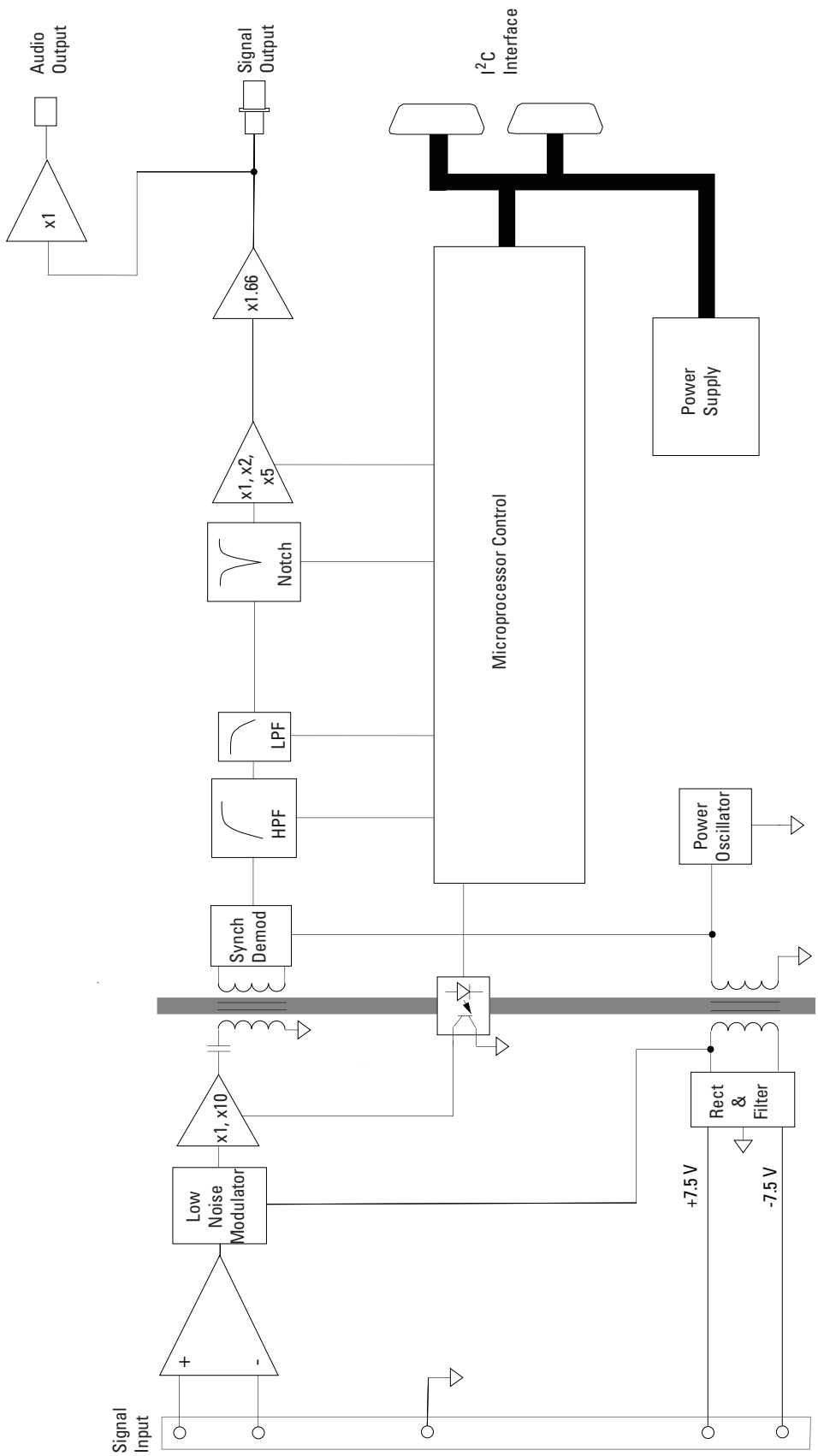

The signal then passes to the first non-isolated gain stage, where it is amplified 1 or 10 times. A switched-capacitor notch filter follows (this is automatically set to 50 or 60 Hz, depending on the mains frequency of the power supply). After this, the signal passes to the final programmable gain stage, where it is amplified 1, 2, or 5 times.

The output of the Neuro Amp EX is buffered with an amplifier with a fixed gain (nominally ×1.66), to compensate for gain differences through the previous stages of the device. An audio signal output, capable of driving headphones or powered speakers, is provided by tapping off and buffering the output stage.

The control for the various filters and gain stages in the Neuro Amp EX is provided by on-board microprocessors, which also communicate with the PowerLab over the I^2C bus.

The Neuro Amp EX Input

The Neuro Amp EX headstage cable plugs into the five-pin input socket on the front panel of the Neuro Amp EX (Figure 9–14). The pin arrangement ensures that polarity is correct. Only the supplied Neuro Amp EX headstage should be used. Using other headstages invalidates the warranty and may not be as safe. ADInstruments are not responsible for damages incurred if using third party headstages.

Figure 8–14
Pin assignments for the Neuro Amp EX input connector

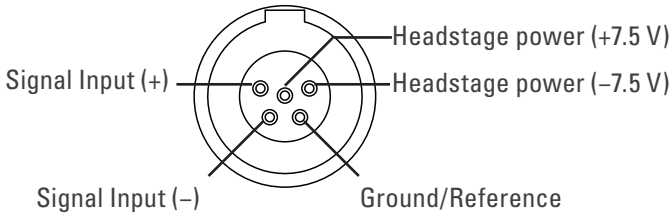

The Neuro Amp EX has one connector: the socket provides two pins for a differential input signal, one pin for the ground/reference, and two pins for power supply to the headstage. The entire connector is physically and electrically isolated to ensure subject safety.

Troubleshooting

This appendix describes most of the common problems that can occur when using the Neuro Amp EX with your PowerLab recording unit. It covers how these problems are caused, and what you can do to alleviate them. If the solutions here do not work, earlier chapters, the LabChart Help Center, and the guide to your PowerLab may contain possible solutions. If none of the solutions here or elsewhere are of help, then consult your ADInstruments representative.

Most of the problems you may encounter are connection problems, and can usually be fixed by checking connections and starting up the hardware and software again. Very rarely will there be an actual problem with the front-end or the PowerLab.

Problems and Solutions

The status indicator fails to illuminate when the software is started, or the front-end commands do not appear where they should

The I^2C cable or the BNC cable from the front-end to the PowerLab are not connected, have been connected incorrectly (to the wrong input, for instance) or are loose.

- Turn everything off. Check to see that all cables are firmly seated and screwed in. The BNC cable from the Neuro Amp EX must be connected to a positive input on the PowerLab. Make sure the input is the same channel from which you expect to use the front-end in the software. Start up again to see if this has fixed the problem.

You are using an early version of LabChart.

- Upgrade to the latest version of the software. Contact your ADInstruments representative for information.

The BNC or I^2C cable is faulty.

- Replace the cable and try again. Immediately label all cables proved faulty so that you don't use them again by accident.

The Neuro Amp EX is faulty.

- This is the least likely event. If the front-end will not work properly after the previous measures, try using it on another PowerLab. If the same problems recur with a second PowerLab, the front-end may be faulty. Contact your ADInstruments representative to arrange for repairs.

On starting up the software, an alert indicates that there is a problem with the front-end or driver

The correct driver is not installed on your computer.

- Reinstall the software.

You are using an early version of LabChart.

- Upgrade to the latest version of the software. Contact your ADInstruments representative for information.

The BNC or I^2C cable is faulty.

- Replace the cable and try again. Immediately label all cables that proved faulty so that you don't use them again by accident.

The Neuro Amp EX is faulty.

- This is the least likely event. If the front-end will not work properly after the previous measures, try using it on another PowerLab. If the same problems recur with a second PowerLab, the front-end may be faulty. Contact your ADInstruments representative to arrange for repairs.

The trace will not zero properly when adjusting high-pass filtering

The Neuro Amp EX is receiving signals at a level that has saturated the input amplifier, resulting in a large offset. This is normally due to poor contact between the electrodes and the subject.

- Check the connections for proper contact and try again.

The signal appears to display a constant amplitude oscillation

Frequency interference from power lines can become superimposed on the biological signal being measured.

- You can use the internal notch filter or the mains filter in the Neuro Amp EX to remove excessive line voltage frequency interference (use the checkbox in the Neuro Amp EX dialog).

The leads you are using may be unshielded or of low quality.

- Check to make sure that you are using high-quality leads. Only the supplied Neuro Amp EX headstage cable should be used.

The signal is noisy at lower ranges

This is probably the amplified noise from the electrodes, not a fault as such. There is, in addition, noise that cannot be avoided by any amplifier (called 'thermal' or 'Johnson' noise).

- Set the low-pass filter to remove the noise. (But be careful, since important components of the signal could also be attenuated.)

This could be due an electrically noisy environment, particularly if there is some equipment that produces a radio frequency that interacts with the Neuro Amp EX modulator, giving a heterodyne effect.

- Turn off pieces of unnecessary equipment to try and isolate the cause, then either leave the equipment off or, if possible, move the subject or equipment outside the area of any interfering field.
- At the lowest ranges you may have to shield, shorten, or even replace the leads, since they will tend to act as radio receptors.

The signal appears to be unusual, very weak, clipped or distorted in some way

This may be a problem of technique: the sampling rate, range or filter settings may be inappropriate for the signal you are recording.

- Make sure the settings are appropriate for the expected signal.

Specifications

Neuro Amp EX Front-end [FE185]

Input

Connection type:	Five-pin Redel connector
Configuration:	One isolated differential channel with isolated ground reference
Input impedance:	100 MΩ
Safety:	Approved to IEC 60601-1 Standard (BF rating)
Isolation:	4000 V_{rms} (50 Hz for 1 minute)
Input ranges:	± 20 µV to ± 1 mV full scale in 6 steps (combined PowerLab, Neuro Amp EX front-end and headstage)

Gain:

Range	Resolution
1 mV	500 nV
500 µV	250 nV
200 µV	100 nV
100 µV	50 nV
50 µV	25 nV
20 µV	10 nV

Filtering

Low-pass filtering:	Fourth-order Bessel filter, ± 3% accuracy. Frequencies software-selectable: 1 kHz, 2 kHz, 5 kHz.
High-pass filtering:	First-order filter, ± 0.25% accuracy.
	Frequencies software-selectable: 100 Hz, 300 Hz, 500 Hz.
Notch filter:	Second-order filter, –32 dB attenuation;
	50 or 60 Hz frequency (automatic sensing)

Output

Signal:	± 2.0 V standard
Audio:	Stereo jack with mono output; ± 200 mV full scale, current limited to ± 5 mA. Suitable for headphones or powered speakers.

Control Port

I^2C port:	Provides control and power. Interface communications rate of ~50 kbits/s.

Physical Configuration

Dimensions (h × w × d):	55 mm × 240 mm × 260 mm (2.2" × 4.7" × 10.2")
Weight:	1.3 kg (2 lb 13 oz)
Power requirements:	~2 W
Operating conditions:	5–35 °C, 0–90% humidity (non-condensing)

Safety

Safety:	Approved to IEC 60601-1 (BF rating – body protection)
EMC:	Approved to EN61326-1:2006 Standard
Other approvals:	CSA/US
Equipment:	Class I
Operation:	Continuous
Unsuitable uses:	Do not use in the presence of flammable anaesthetic - air mixtures. Avoid operating near high voltage, RF or strong magnetic fields that may cause interference.

Neuro Amp EX Headstage [MLT185]

Connection type:	Gold plated miniature sockets WPI 220-883-S02. To suit Male 220-P02
Configuration:	Differential
Input impedance:	100 MΩ // ~100 pF
Gain:	×100
Input leakage current:	~1 pA
CMRR:	100 dB typical @ 50/60 Hz
Noise (rti):	< 2 μV_{rms}, < 14 μV_{pp} (100 Hz – 5 kHz)
Power:	From the Neuro Amp EX front-end
Electrode type:	Suitable for metal microelectrodes (300 kΩ typical)
Dimensions:	8 mm OD, 100 mm long
Material:	Stainless steel
Cable length:	2.8 m

ADInstruments reserves the right to alter these specifications at any time.

Electromagnetic Compatibility

The FE185 Neuro Amp EX (the device) has been tested to comply with the requirements of IEC 60601-1-2, IEC 61000-3-2, IEC 61000-3-3, IEC 61000-4-2, IEC 61000-4-3, IEC 61000-4-4, IEC 61000-4-5, IEC 61000-4-6, IEC 61000-4-8, IEC 61000-4-11 and CISPR 11. It is approved to the EN61326-1:2006 Standard.

Emissions

- The device uses RF energy for its internal function only. RF emissions are very low and are not likely to cause any interference in nearby electronic equipment.
- The device is suitable for use in all establishments, including domestic establishments and those directly connected to the public low-voltage power supply network that supplies buildings used for domestic purposes.

Immunity

- Mains power quality should be that of a typical commercial or hospital environment. If the user of the device requires continued operation during power mains interruptions, it is recommended that the device be powered from an uninterruptible power supply or a battery.
- Power frequency magnetic fields should be at levels characteristic of a typical location in a typical commercial or hospital environment.
- Floors should be wood, concrete or ceramic tile. If floors are covered with synthetic material, the relative humidity should be at least 30%.

Separation Distances

- The device is intended for use in an electromagnetic environment in which radiated RF disturbances are controlled.
- Portable and mobile RF communications equipment should be used no closer to any part of the device, including cables, than the recommended separation distance in the table below.
- Field strengths from fixed RF transmitters, as determined by an electromagnetic site survey, should be less than the compliance level in each frequency range.

Rated maximum output power of transmitter, P	Separation distance	
	150 kHz to 800 MHz	800 MHz to 2.5 GHz
	$d = 1.17\sqrt{P}$	$d = 2.33\sqrt{P}$
0.01 W	0.1 m	0.2 m
0.1 W	0.4 m	0.7 m
1 W	1.2 m	2.3 m
10 W	3.7 m	7.4 m
100 W	11.7 m	23.4 m

Chapter 6

Warranty

Product Purchase and License Agreement

This Agreement is between ADInstruments Pty Ltd ['ADI'] and the purchaser ['the Purchaser'] of any ADI product or solution — software, hardware or both — and covers all obligations and liabilities on the part of ADI, the Purchaser, and other users of the product. The Purchaser (or any user) accepts the terms of this Agreement by using the product or solution. Any changes to this Agreement must be recorded in writing and have ADI's and the Purchaser's consent.

Responsibilities

The Purchaser and any others using any ADI product or solution agree to use it in a sensible manner for purposes for which it is suited, and agree to take responsibility for their actions and the results of their actions. If problems arise with an ADI product, ADI will make all reasonable efforts to rectify them. This service may incur a charge, depending on the nature of the problems, and is subject to the other conditions in this Agreement. ADI does not separately warrant the performance of products, equipment or software manufactured by third parties which may be provided to Purchaser as part of an overall solution. However, as further noted below, ADI will pass through to Purchaser all applicable third party warranties to the extent it has the right to do so.

ADI Product Hardware Warranty

ADI warrants that PowerLab Data Acquisition Units (PL prefix)1 and Front-ends (FEprefix)2 shall be free from defects in materials and workmanship for five (5) years from the date of purchase. Other PowerLab Data Acquisition Units3, Front-ends4 and Pods5 shall be free of defects in material and workmanship for three (3) years from their date of purchase. ADI also warrants that ADI Specialized Data Recorders6 and Instruments7 shall be free of defects in material and workmanship for one (1) year from their date of purchase. If there is such a defect, as Purchaser's sole remedy hereunder, ADI will repair or replace the equipment as appropriate, and the duration of the warranty shall be extended by the length of time needed for repair or replacement.

To obtain service under this warranty, the Purchaser must notify the nearest ADI office, or Authorized Representative, of the defect before the warranty expires. The ADI or Representative office will advise the Purchaser of the nearest service center address to which the Purchaser must ship the defective product at his or her own expense. The product should be packed safely, preferably in its original packaging. ADI will pay return shipping costs.

Hardware Warranty Limitations

This warranty applies only to the ADI hardware specified in this document and used under normal operating conditions and within specification. Consumables, electrodes and accessories are not covered by this warranty. Third party equipment may be covered by the third party manufacturer's warranty. To the extent that ADI has the right to pass through any third party manufacturer warranties to Purchaser it will do so to the extent it is able to do so. Copies of applicable third party manufacturer warranties, to the extent they exist, are available upon request. The warranty provided hereunder does not cover hardware modified in any way, subjected to unusual physical, electrical or environmental stress, used with incorrectly wired or substandard connectors or cables, or with the original identification marks altered. Tampering with or breaking of the Warranty Seal will also void the warranty.

Product Types & Warranty Term

ADI manufactured products covered by a five (5) year warranty

[1] Data Acquisition Units: PowerLab 35 series with PL prefix
[2] Front-ends: ADI Front-end Signal Conditioners with FE prefix.

ADI manufactured products covered by three (3) year warranty

[3] Data Acquisition Units: PowerLab 26 series with ML prefix
[4] Front-ends: ADI Front-end Signal Conditioners with ML prefix.
[5] Pods: The entire range of ADI Pod Signal Conditioners.

ADI manufactured products covered by one (1) year warranty

[6] Specialized Data Recorders: Metabolic Systems (e.g., ML240 PowerLab/8M Metabolic System)
[7] Instruments: Blood FlowMeter, Gas Analyzers, NIBP System (excluding transducers), STH Pump Controller.

Third Party Products (Including Transducers)

Products not manufactured by ADI are covered by the manufacturer's warranty.

Accessories and Consumables

Accessories and Consumables are not covered by any type of warranty.

General Limitations

ADI products are produced to high standards, and should perform as described in the supplied documentation. There is a limited hardware warranty, and technical support is provided for all ADI products. Nevertheless, since ADI products could be affected by external factors (for instance, the computer system on which they run and other hardware and/or software provided by third parties), absolute performance and reliability of products and the overall solution cannot be guaranteed. No warranty, either expressed or implied or statutory, other than that expressly contained in this Agreement, is made in respect to ADI products or software, third party products or software, the overall solution or otherwise. The Purchaser therefore assumes all risks as to the performance and reliability of the products, the software, the solution and the results gained using them. ADI neither assumes or authorizes any person to assume on its behalf any liability in connection with the sale, installation, service or use of its products. ADI shall not be held responsible for special, consequential or punitive damages of any kind arising out of

sale, installation service or use of its products.

EXCEPT FOR THE EXPRESS WARRANTY SET FORTH HEREIN, THE SOLUTION AS WELL AS ALL EQUIPMENT AND SOFTWARE PROVIDED HEREUNDER ARE PROVIDED “AS IS” AND ADI MAKES NO WARRANTY. AS TO ITS USE OR PERFORMANCE. EXCEPT FOR ANY WARRANTY, CONDITION, REPRESENTATION OR TERM THE EXTENT TO WHICH CANNOT BE EXCLUDED OR LIMITED BY APPLICABLE LAW, ADI AND ITS SUPPLIERS MAKE NO WARRANTY, CONDITION, REPRESENTATION, OR TERM (EXPRESS OR IMPLIED, WHETHER BY STATUTE, COMMON LAW, CUSTOM, USAGE OR OTHERWISE) AS TO ANY MATTER INCLUDING, WITHOUT LIMITATION, NON INFRINGEMENT OF THIRD PARTY RIGHTS, MERCHANTABILITY, INTEGRATION, OR FITNESS FOR A PARTICULAR PURPOSE. YOU ASSUME RESPONSIBILITY FOR SELECTING THE SOLUTION TO ACHIEVE YOUR INTENDED RESULTS, AND FOR THE INSTALLATION OF, USE OF, AND RESULTS OBTAINED FROM THE EQUIPMENT AND SOFTWARE. WITHOUT LIMITING THE FOREGOING PROVISIONS, ADI MAKES NO WARRANTY THAT THE EQUIPMENT OR SOFTWARE WILL BE ERROR-FREE OR FREE FROM INTERRUPTIONS OR OTHER FAILURES OR THAT THE SOFTWARE OR EQUIPMENT WILL MEET YOUR REQUIREMENTS. UNDER NO CIRCUMSTANCES AND UNDER NO LEGAL THEORY, WHETHER IN TORT, CONTRACT, OR OTHERWISE, SHALL ADI OR ITS SUPPLIERS BE LIABLE TO PURCHASER OR TO ANY OTHER PERSON FOR LOSS OF PROFITS, LOSS OF GOODWILL, OR ANY INDIRECT, SPECIAL, INCIDENTAL, OR CONSEQUENTIAL DAMAGES, OR DAMAGES FOR GROSS NEGLIGENCE OF ANY CHARACTER INCLUDING, WITHOUT LIMITATION, DAMAGES FOR LOSS OF GOODWILL, WORK STOPPAGE, COMPUTER FAILURE OR MALFUNCTION, OR FOR ANY OTHER DAMAGE OR LOSS. IN NO EVENT SHALL ADI OR ITS SUPPLIERS BE LIABLE FOR ANY DAMAGES IN EXCESS OF THE PRICE PAID FOR THE EQUIPMENT AND SOFTWARE, EVEN IF ADI, OR ITS AUTHORIZED PARTNERS OR SUPPLIERS HAVE BEEN ADVISED OF THE POSSIBILITY OF SUCH DAMAGES.

ADI is acting on behalf of its suppliers for the purpose of disclaiming, excluding and/or limiting obligations, warranties and liability as provided in this agreement, but in no other respects and for no other purpose. The foregoing provisions shall be enforceable to the maximum extent permitted by applicable law.

Controlling Law and Severability

This license shall be governed by the laws of the territory into which the software is sold, or if sold into the United States of America, by the laws of the State of California.

Technical Support

The Purchaser is entitled to free technical support for any ADI product for one year from its date of purchase. Our technical support staff can provide advice concerning installation and operation of ADI products. Services outside of this may incur a charge. Technical support staff will not provide experimental protocols or procedural instructions for conducting experiments. However, information of this type may be provided in the supplied product documentation, or on ADI web sites.

Inquiries

For additional information or service inquiries please contact the nearest ADInstruments office or Authorized Distributor. For contact details see www.ADInstruments.com